Model Name: GA-P110-D3

rev 1.0

SHEET	TITLE	
01	COVER SHEET	
02	BOM & PCB MODIFY HISTORY	
03	BLOCK DIAGRAM	
04	CPU_LGA1151-A-DP/DMI/PCIE	
05	CPU_LGA1151-B-DDR4	
06	CPU_LGA1151-C	
07	CPU_LGA1151-D	
08	DDR 4 CHANNEL A	(Rev 0.3)
09	DDR 4 CHANNEL B	
10	PCH CLOCK BUFFER	(Rev 0.70)
11	PCH DMI,USB,PCIE	
12	PCH MISC	
13	PCH SATA,PCIE,SATA_EXPRESS	
14	PCH_PWR,GND	
15	Dual BIOS	(Rev 0.1)
16	I/O ITE8628	(Rev 1.06)
17	HWM	
18	FAN CTRL-SIO	(Rev 0.53)
19	PCIEX16 SLOT	(Rev 0.2)
20	PCIEX1 SLOT	
21	M.2 x4	(Rev 0.10)
22	M.2 SWITCH_D	
23	SATA	(Rev 0.5)
24	VCORE_ ISL95858(PWM)	(Rev 0.15)
25	VCORE_ ISL95858(Vcore)	
26	VCORE_ ISL95858(VccGT)	
27	VCCSA_VCCIO_VCCPLL	(Rev 0.40)
28	RT8237_DDR (Bead)	(Rev 0.30)
28	NTC3103_VTT (Bead)	(Rev 0.23)
29	RT8237_PCH (Bead)	(Rev 0.50)
30	DISCRETE POWER	(Rev 0.51)
31	ATX POWER , -PROCHOT	

SHEET	TITLE	
32	KB_MS_USB	(Rev 0.53)
33	F_PANEL	
34	R_USB30	
35	USB_LAN CONNECTOR-8111G	
36	Realtek 8111GUS	(Rev 1.06)
37	ALC887-VD2 CODEC	(Rev 0.5)
38	REAR AUDIO JACK	
39	F_USB30	(Rev 0.53)
40	R_USB20 /F_USB20	(Rev 0.53)
41	COM , LPT , TPM , THB	(Rev 0.53)
42	IT8892E/JX	(Rev 0.1)
43	LDO POWER	
44	PCI SLOT 1&2&3	
45	RTD2168 - DP to VGA - IC	(Rev 1.03)
46	RTD2168 - DP to VGA - Conn	
47	Thermesister Location	
48	Heatsink	
49	EMI-ESD	

www.altech1.ru

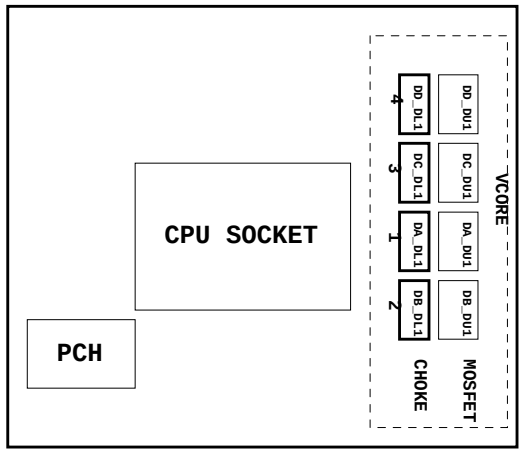

Gigabyte Technology		
Title: Cover Sheet		
Size: Custom	Document Number: GA-P110-D3	Rev: 1.0
Date: Monday, April 11, 2016	Sheet 1 of 50	

GA-H110-D3 DDR4

Component value change history

Data	Change Item	Reason
2015/02/12 EBOM:01	BOM first release (need BIOS support)	
2015/09/10 EBOM:10		

Circuit or PCB layout change

DATE	Change Item	Reason
2015/02/12 PCB:0.1	PCB first release	
2016/01/08 PCB:0.1	Rev. 0.1 MODIFY TO H110-D3 DDR4 REV1.0 後窗新增HDMI	

www.aitech1.ru

GIGABYTE™

Title	BOM & PCB MODIFY HISTORY	
Size: Custom	Document Number: GA-P110-D3	Rev: 1.0
Date: Monday, April 11, 2016	Sheet 2 of 50	

BLOCK DIAGRAM

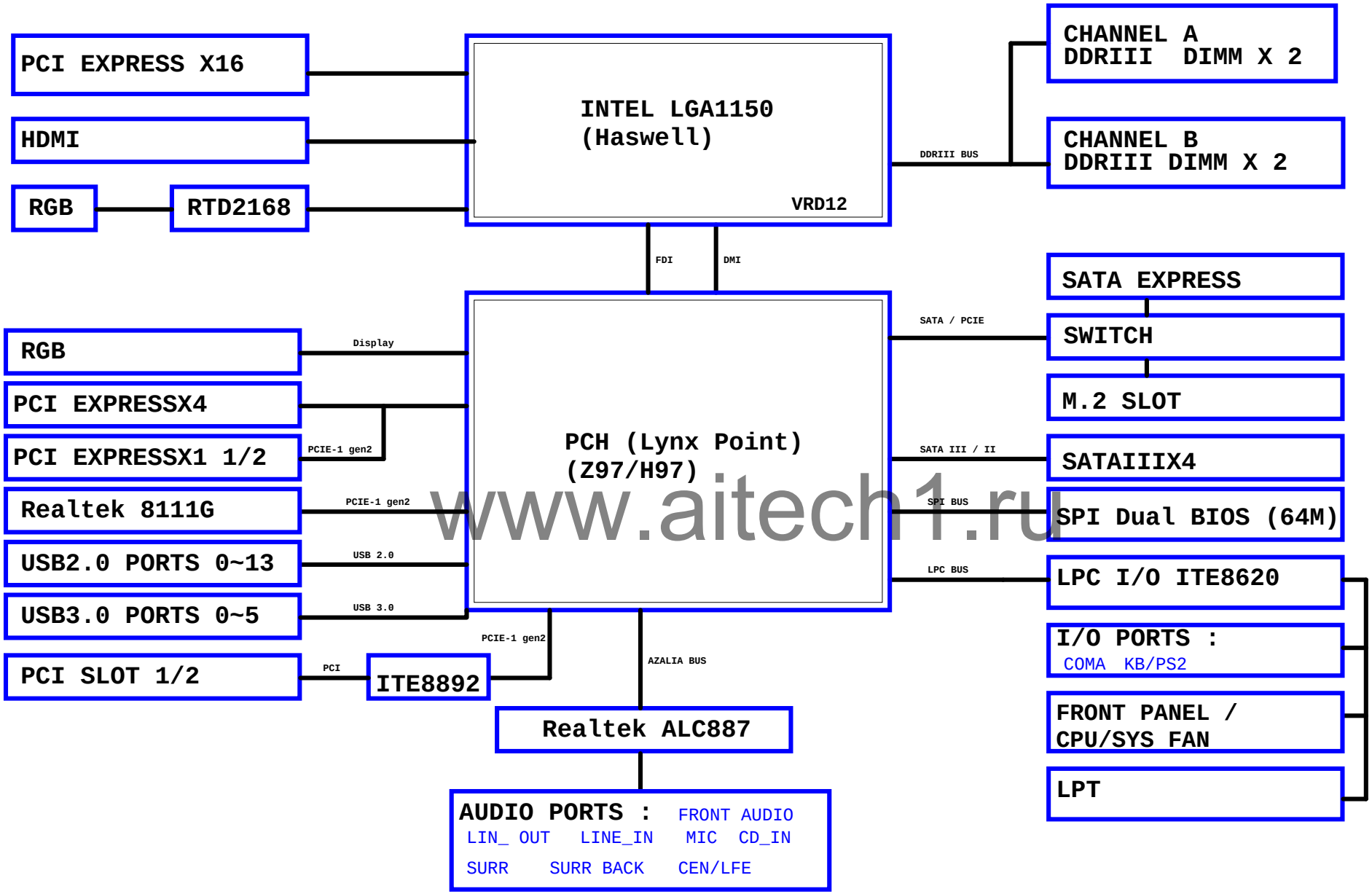

www.aitech1.ru

Gigabyte Technology			
Title	BLOCK DIAGRAM		
Size C	Document Number	GA-P110-D3	Rev 1.0
Date: Monday, April 11, 2016	Sheet 3 of 50		

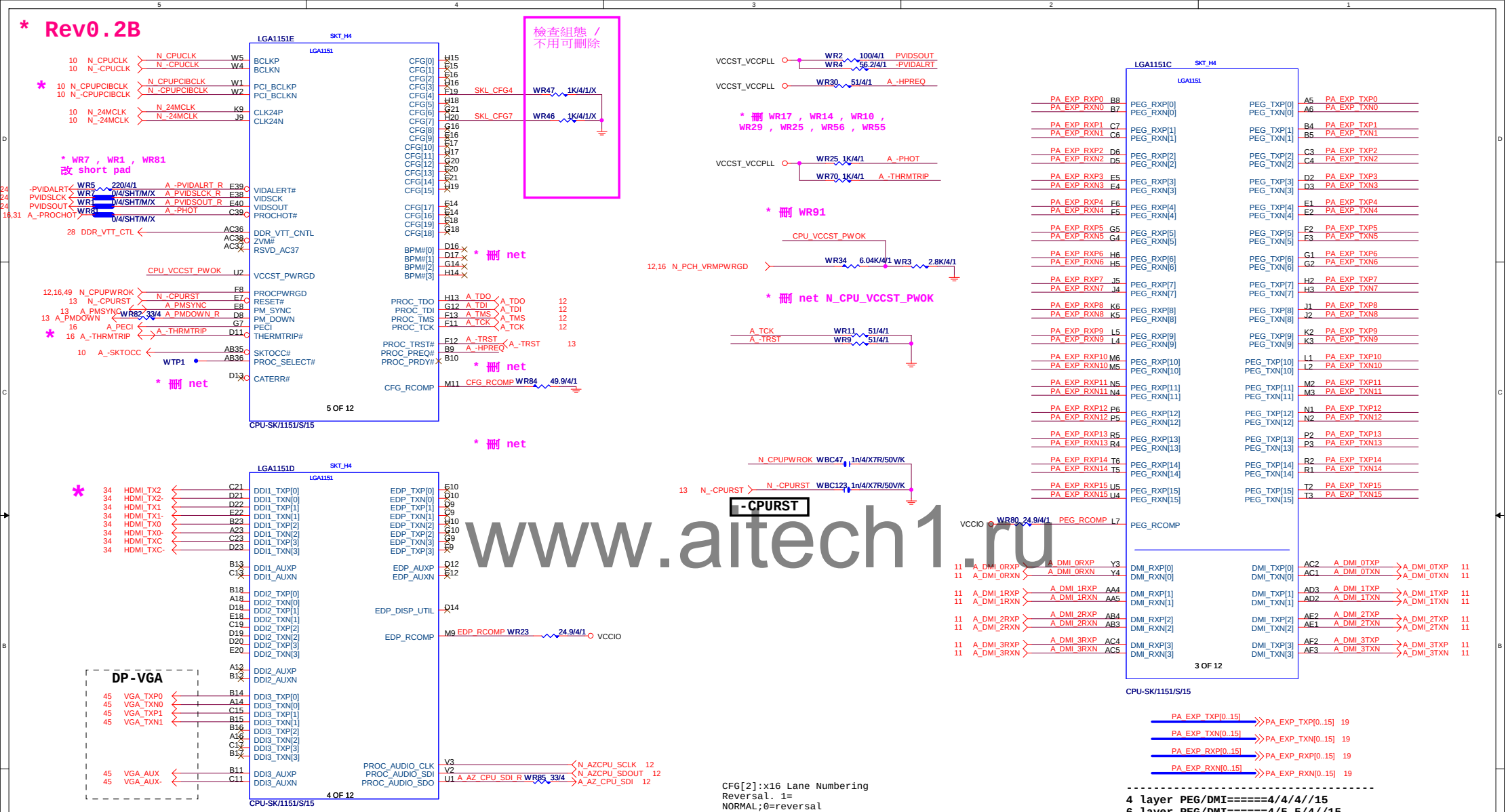

www.aitech1.ru

G-15u : (CPU-SK/1151/S/15)
10SC1-F01151-11R / 10SC1-F01151-12R
G-FL : (CPU-SK/1151/S/GF)
10SC1-F01151-21R / 10SC1-F01151-22R

---
4 layer HDMI/DP/eDP/======4/4/4//15
6 layer HDMI/DP/eDP/======4/5.5/4//15

Impedance=85 +- 15%

CFG[2]:x16 Lane Numbering
Reversal. 1=
NORMAL;0=reversal

CFG[4]: eDP
enable:1:disable/0=enable

CFG[6:5]:PCI Express* Bifurcation; 11=
1 x16 PCI Express;10=2x8 PCI Express

CFG[7]: PEG Training:1=(default) PEG Train
immediately following RESET#;0=PEG Wait
for BIOS

Bifurcation Config.	Signals Lanes CFG[6]	CFG[5]	CFG[2]
1x16	1	1	1
1x16 Reversed	1	1	0
2x8	1	0	1
2x8 Reversed	1	0	0
1x8+2x4	0	0	1
1x8+2x4 Reversed	0	0	0

---
4 layer PEG/DMI======4/4/4//15
6 layer PEG/DMI======4/5.5/4//15

Impedance=85 +- 15%

W=12 mil out of CPU
S=15 mil out of CPU

Gigabyte Technology

Title	CPU LGA1151-A	
Size: Custom	Document Number: GA-P110-D3	Rev: 1.0
Date: Monday, April 11, 2016	Sheet 4 of 50	

* 改DDR4 net

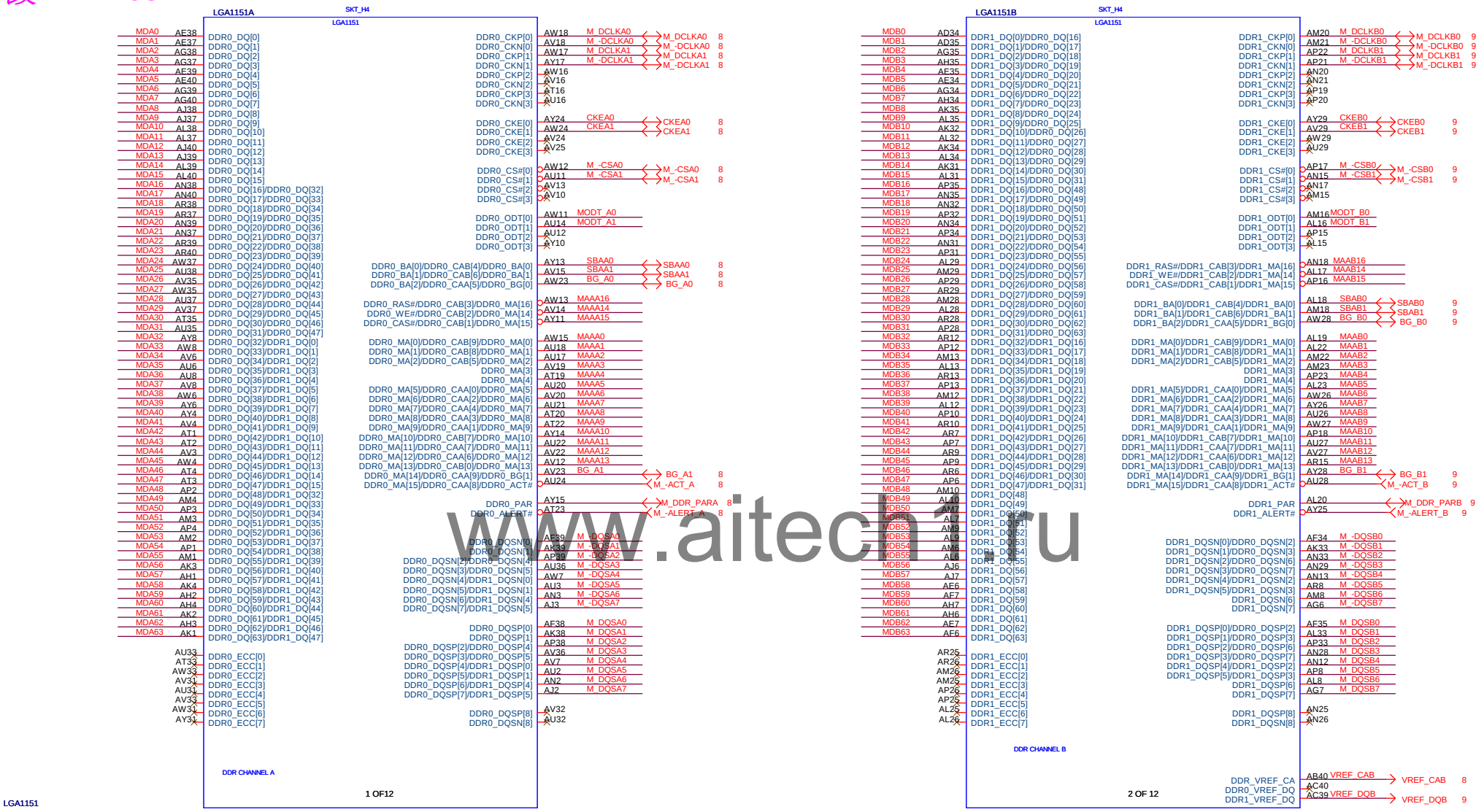

www.aitech.ru

LGA1151

ILM_BP_CR/115X/NORMAL NI

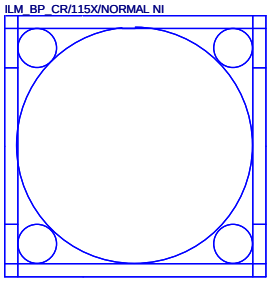

Need check the new CPU ME

8	MODT_A[0..1]	MODT_A[0..1]	
9	MODT_B[0..1]	MODT_B[0..1]	
8	MDA[0..63]	MDA[0..63]	
9	MDB[0..63]	MDB[0..63]	
8	M_DQSA[0..7]	M_DQSA[0..7]	
8	M_-DQSA[0..7]	M_-DQSA[0..7]	
8	MAAA[0..16]	MAAA[0..16]	
9	MAAB[0..16]	MAAB[0..16]	
9	M_DQSB[0..7]	M_DQSB[0..7]	
9	M_-DQSB[0..7]	M_-DQSB[0..7]	

Gigabyte Technology

Title: **CPU LGA1151-B**

Size: Custom | Document Number: **GA-P110-D3** | Rev: 1.0

Date: Monday, April 11, 2016 | Sheet 5 of 50

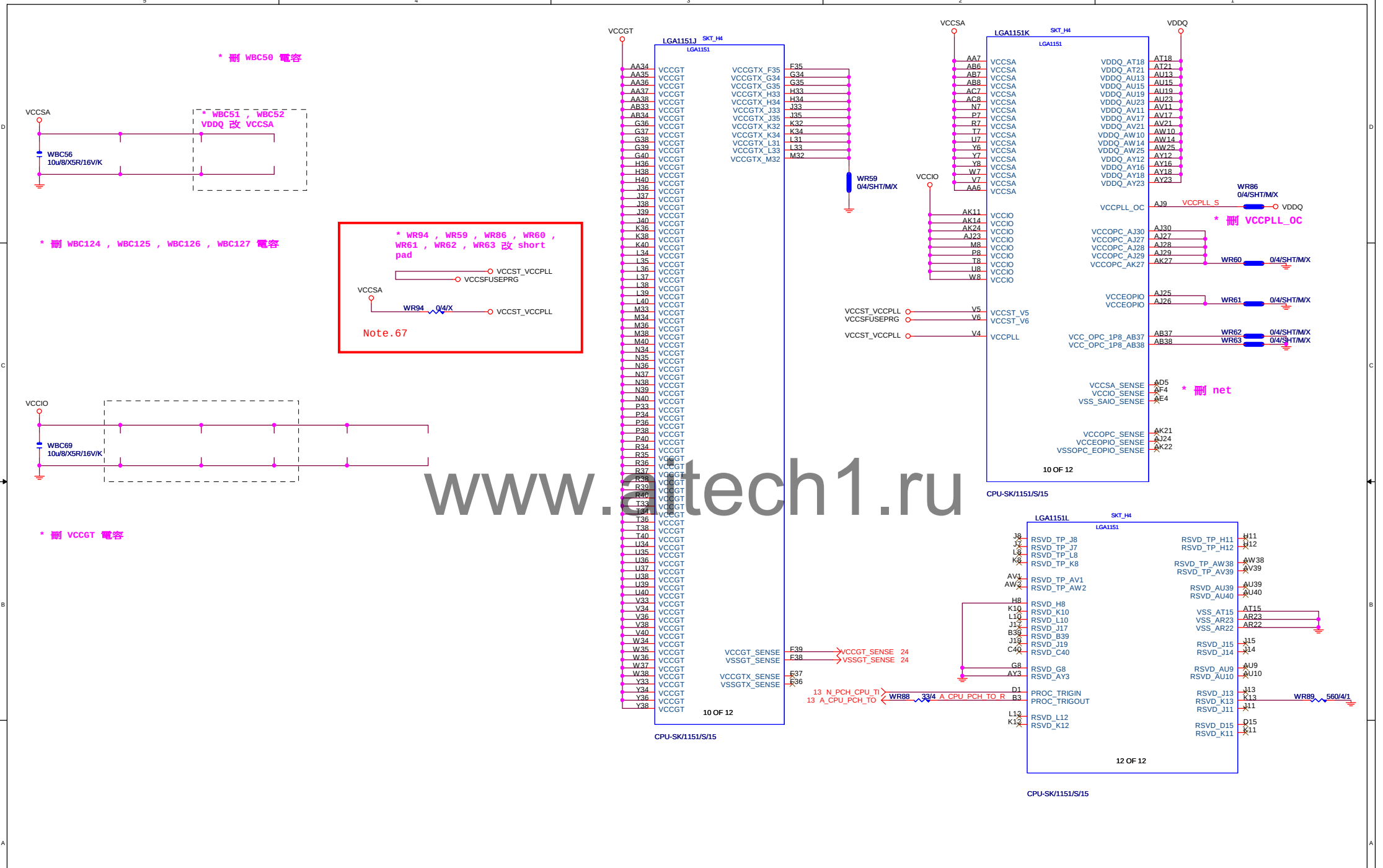

www.gtech1.ru

Gigabyte Technology			
Title	CPU LGA1151-C		
Size Custom	Document Number GA-P110-D3		Rev 1.0
Date: Monday, April 11, 2016	Sheet 6 of 50		

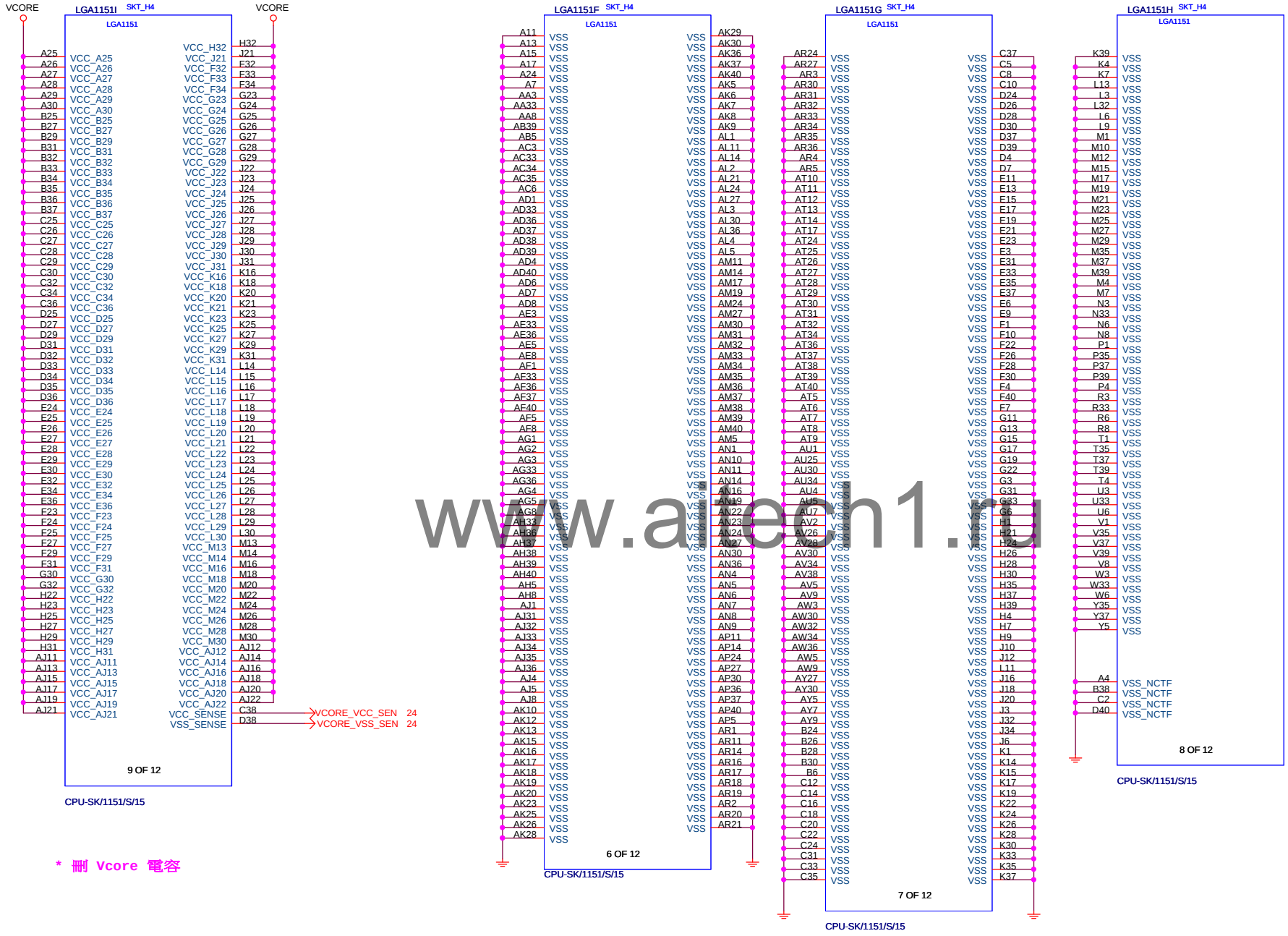

* 刪 Vcore 電容

www.alech1.ru

Gigabyte Technology		
Title	CPU LGA1151-C	
Size Custom	Document Number GA-P110-D3	Rev 1.0
Date: Monday, April 11, 2016	Sheet 7 of 50	

Rev:0.6

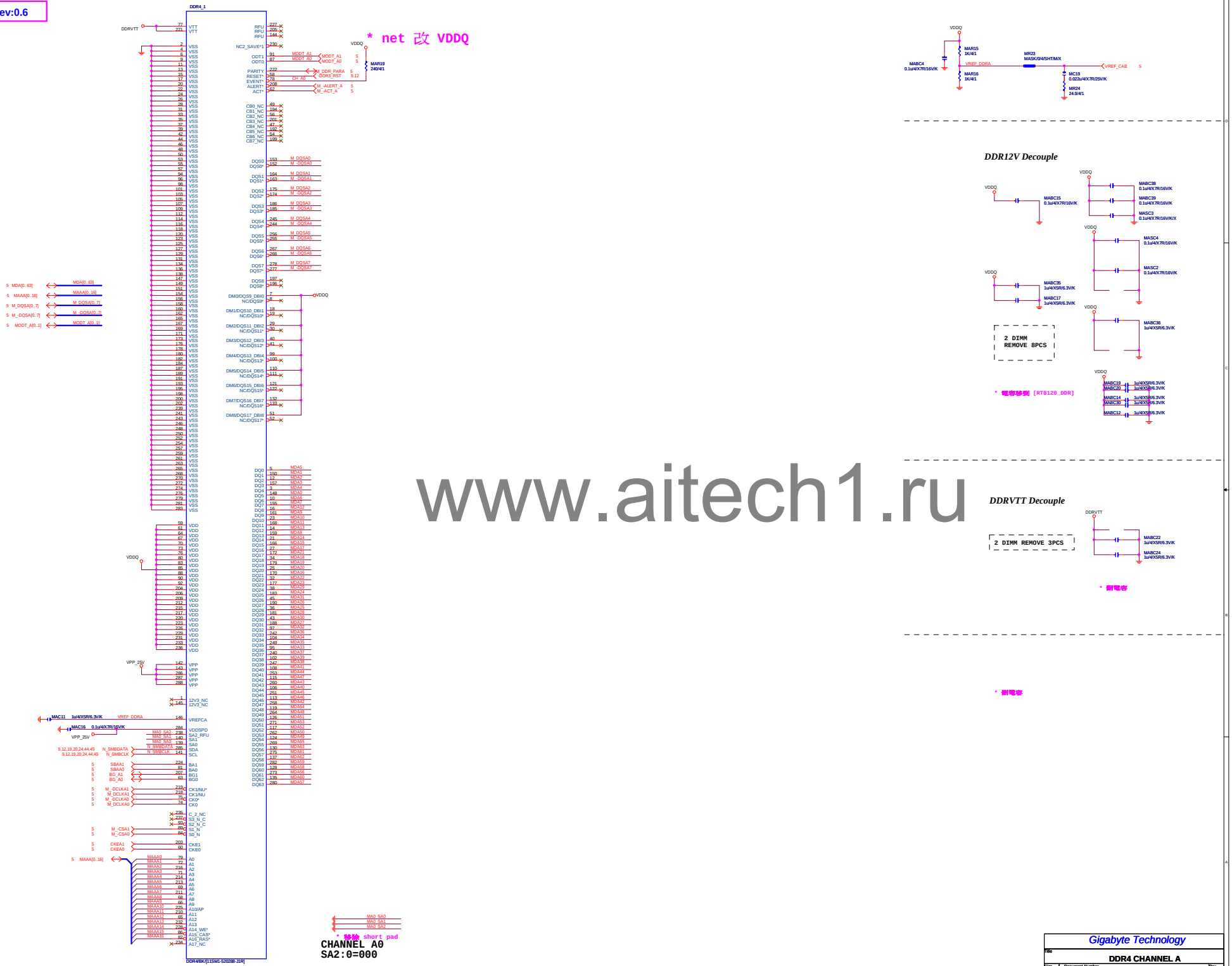

www.aitech1.ru

Gigabyte Technology			
Title	DDR4 CHANNEL A		
Size	Document Number		Rev
Custom	GA-P110-D3		1.0
Date:		Sheet 8 of 50	

Rev:0.6

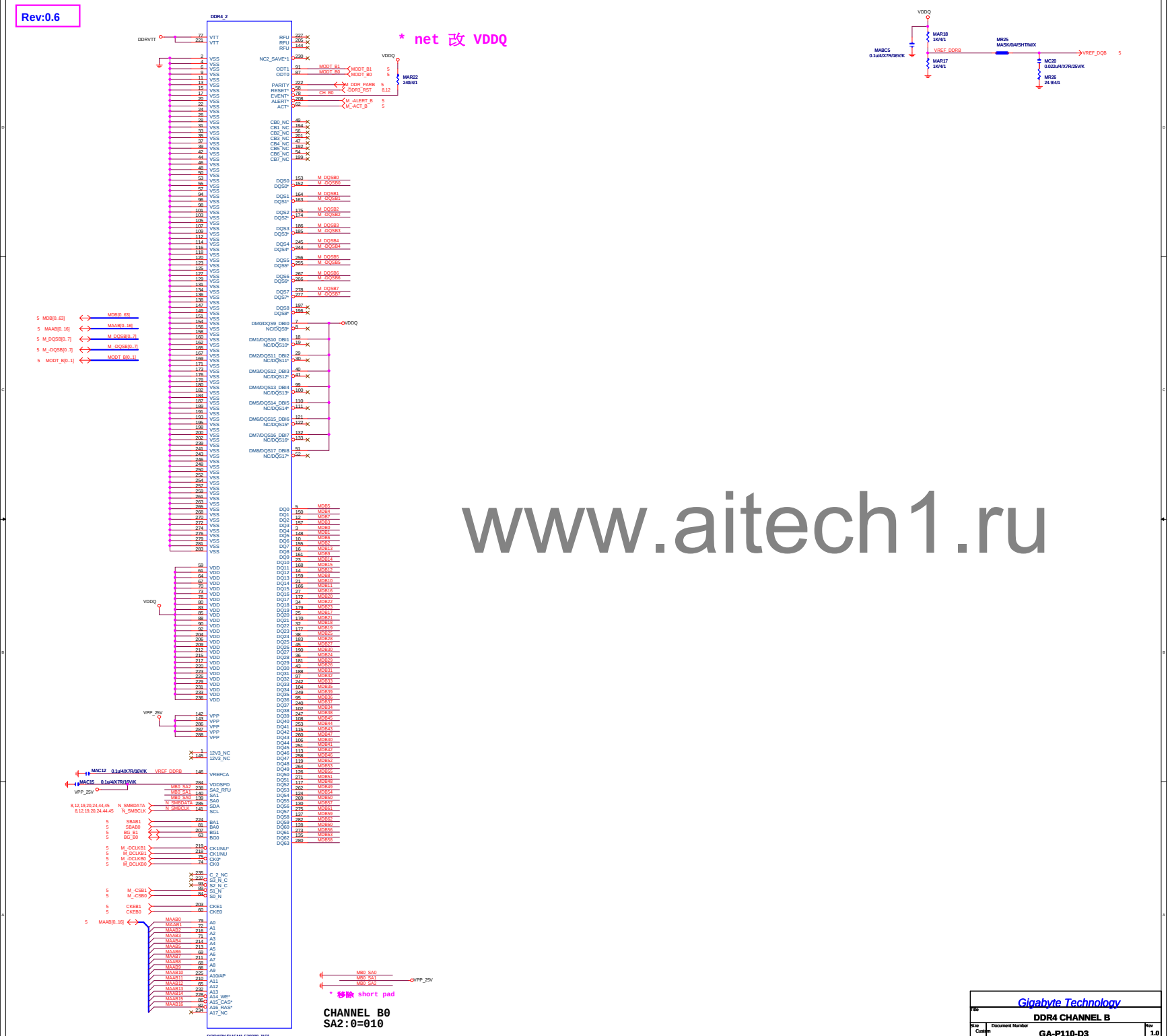

* net 改 VDDQ

* 移除 short pad

CHANNEL B0
SA2:0=010

www.aitech1.ru

Gigabyte Technology	
Title	DDR4 CHANNEL B
Size: Custom	Document Number: GA-P110-D3
Rev	1.0
Date:	Sheet 9 of 50

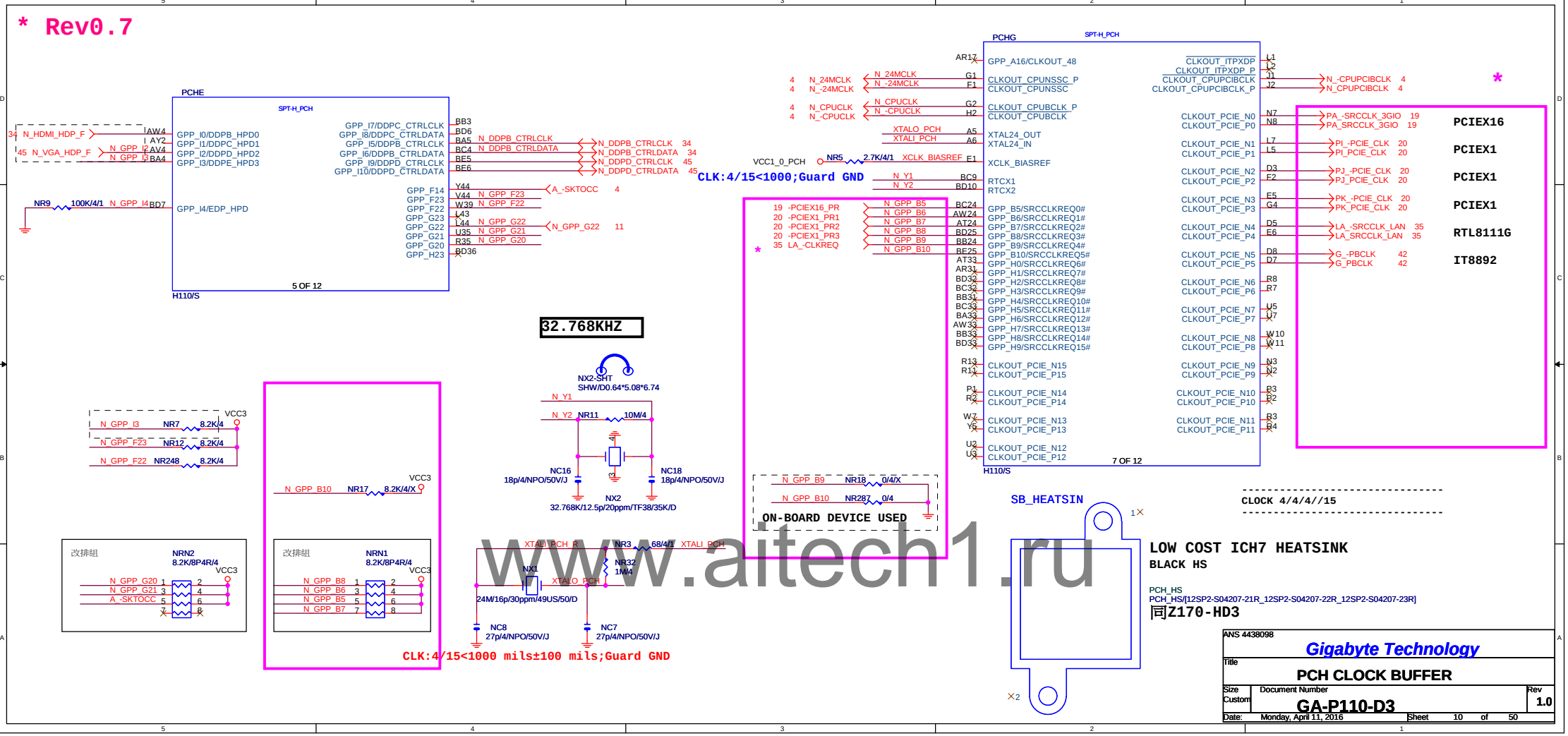

www.aitech1.ru

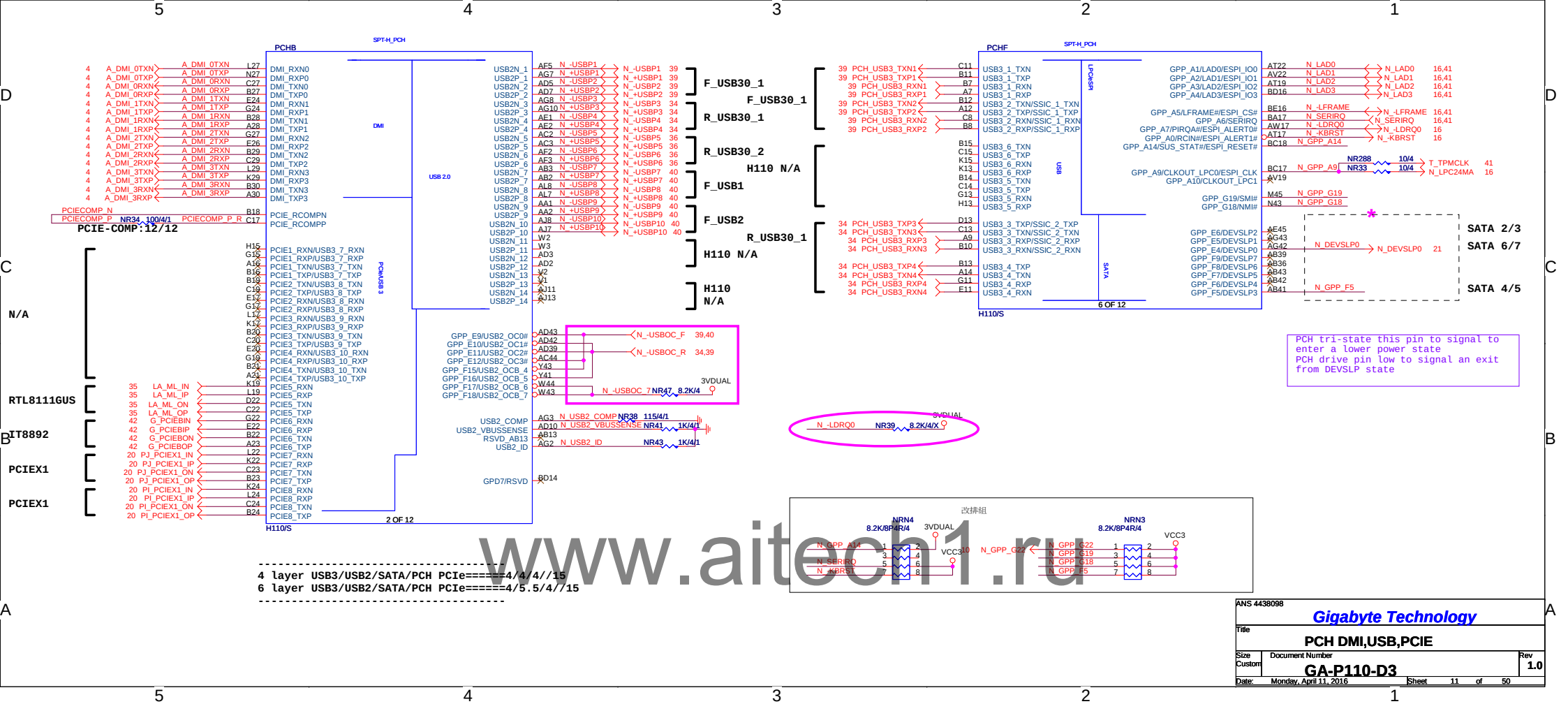

www.aitech1.ru

ANS 4438098

Gigabyte Technology

Title: **PCH DMI,USB,PCIE**

Size: Custom | Document Number: **GA-P110-D3** | Rev: **1.0**

Date: Monday, April 11, 2016 | Sheet 11 of 50

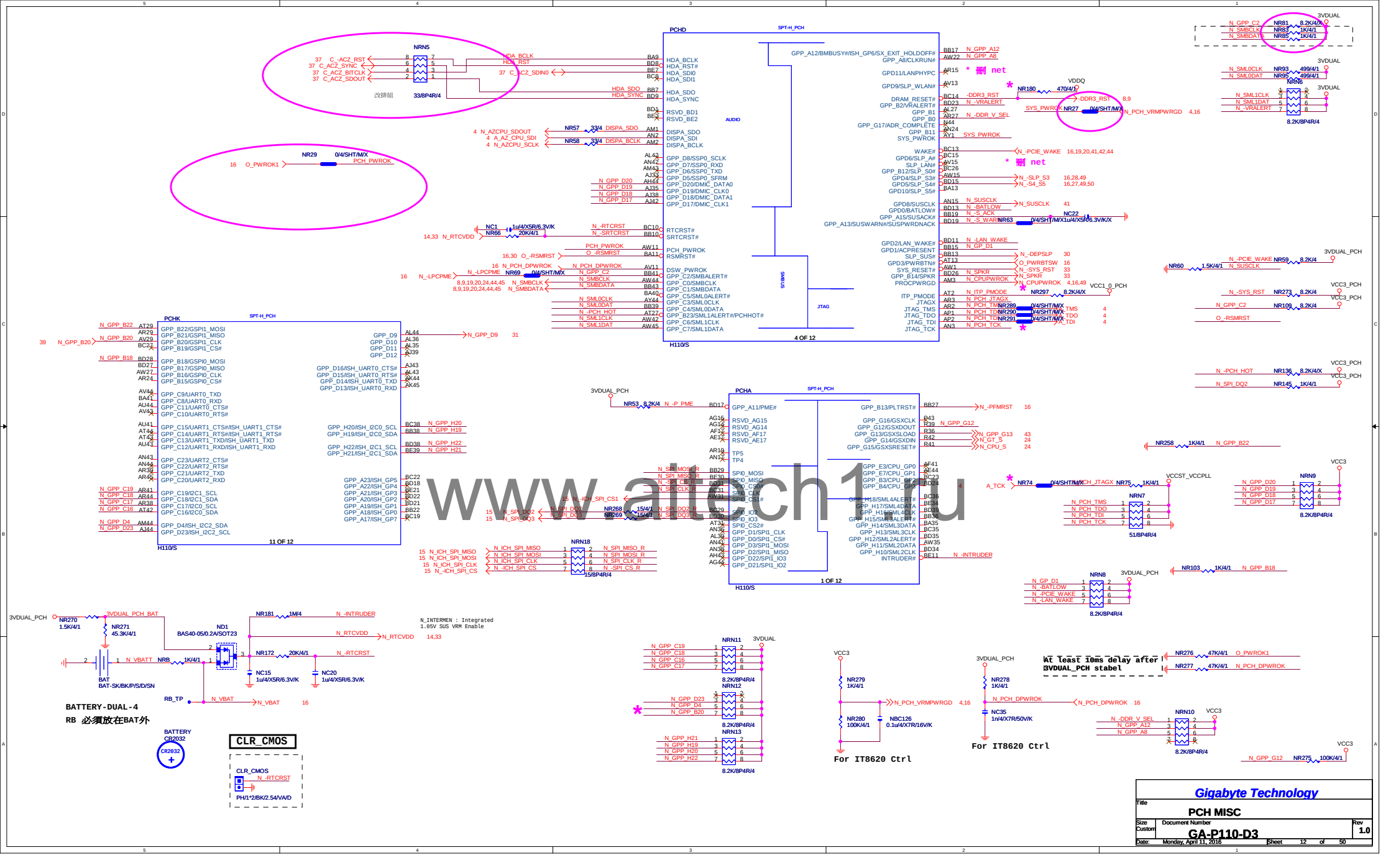

www.altech1.u

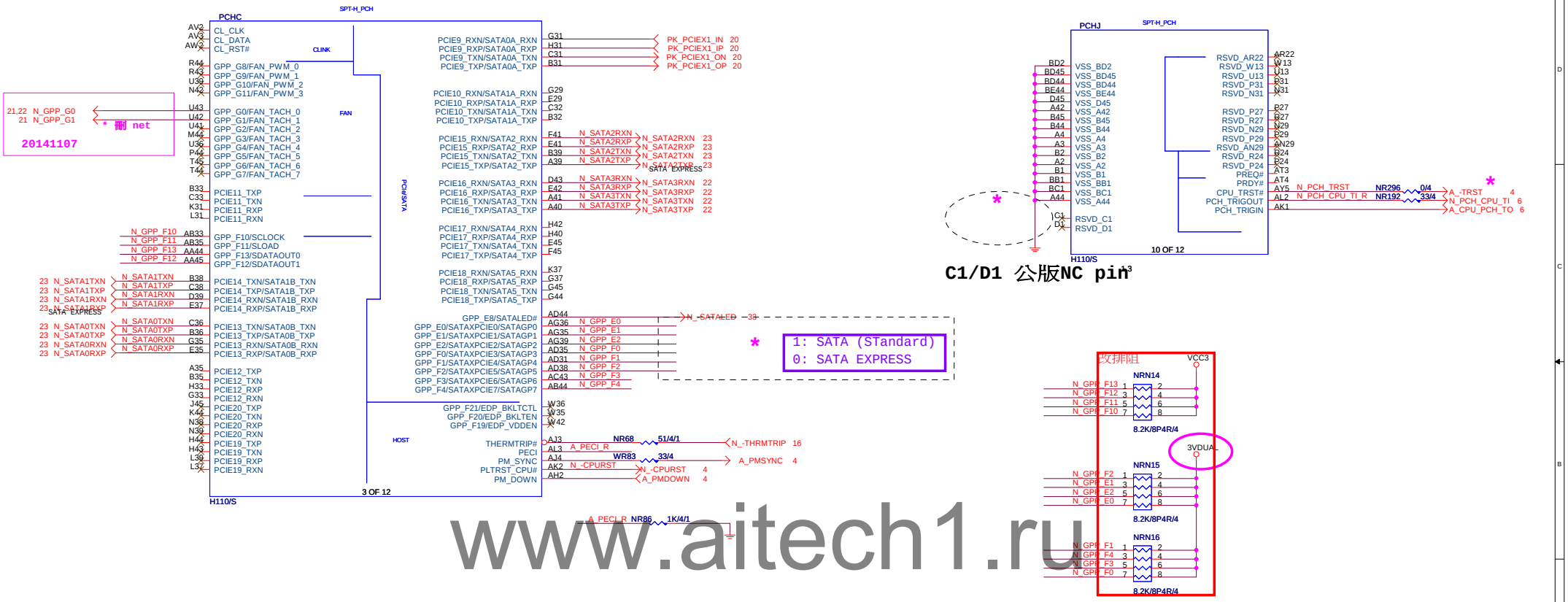

www.aitech1.ru

Gigabyte Technology			
Title	PCH SATA,PCIE,SATA_EXPRESS		
Size Custom	Document Number GA-P110-D3		Rev 1.0
Date: Monday, April 11, 2016	Sheet 13 of 50		

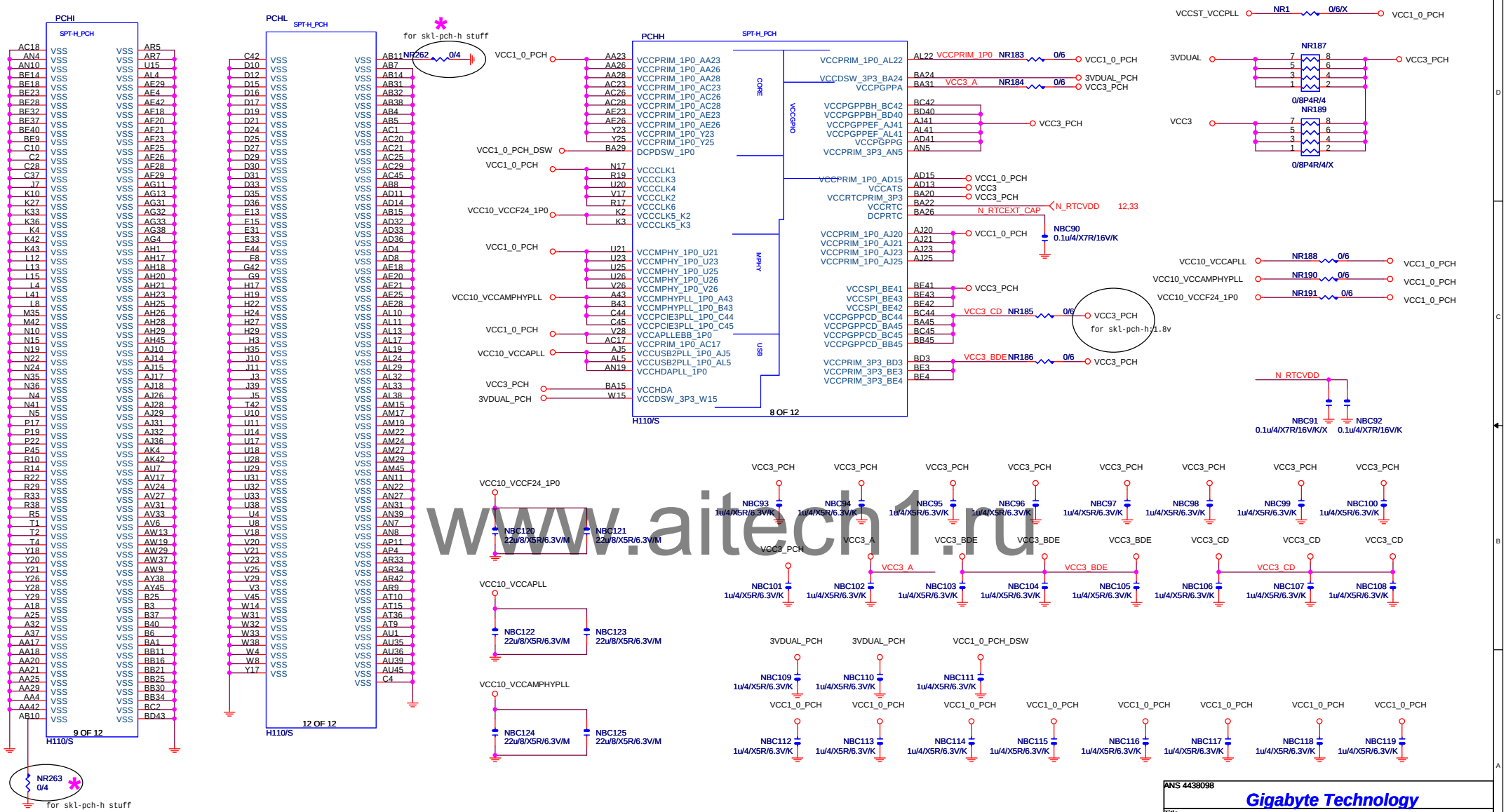

www.aitech1.ru

ANS 4438098

Gigabyte Technology

Title: **PCH PWR, GND**

Size	Document Number	Rev
Custom	GA-P110-D3	1.0

Date: Monday, April 11, 2016 Sheet 14 of 50

Rev 0.1

DUAL BIOS

MOSI For DMI RX Termination Voltage

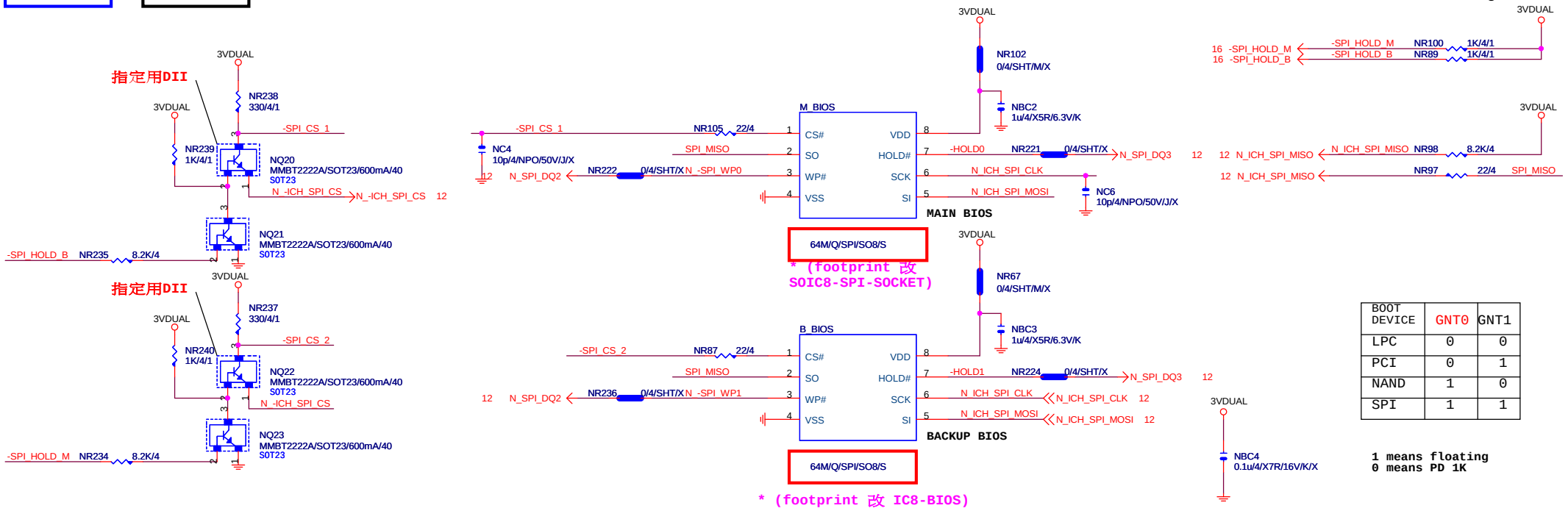

BOOT DEVICE	GNT0	GNT1
LPC	0	0
PCI	0	1
NAND	1	0
SPI	1	1

1 means floating
0 means PD 1K

www.aitech1.ru

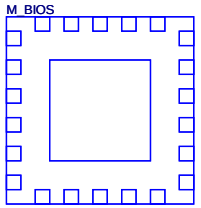

LCP/G-FL/1.27mm/200MIL/WHITE[10SL2-000008-31R]/X

* 試產先上 , PVT 移除

BIOS_PH

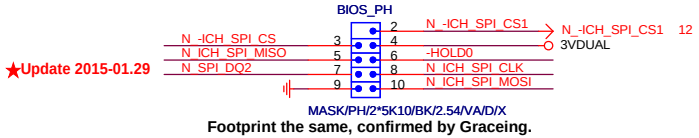

Footprint the same, confirmed by Graceing.

Use COM port pin header part.

Gigabyte Technology			
Title	BIOS		
Size Custom	Document Number	GA-P110-D3	Rev 1.0
Date: Monday, April 11, 2016	Sheet 15 of 50		

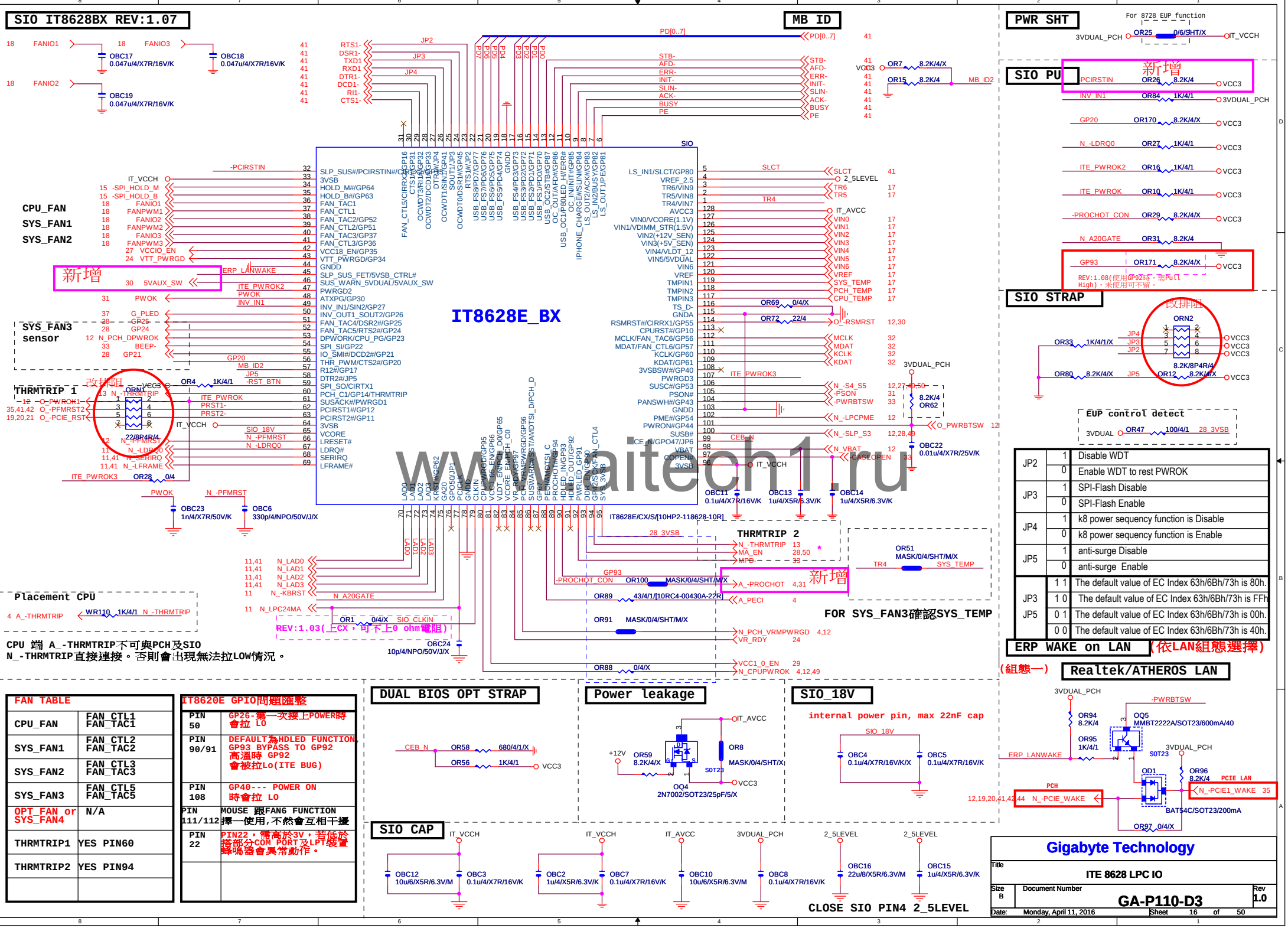

FAN TABLE	
CPU_FAN	FAN_CTL1 FAN_TAC1
SYS_FAN1	FAN_CTL2 FAN_TAC2
SYS_FAN2	FAN_CTL3 FAN_TAC3
SYS_FAN3	FAN_CTL5 FAN_TAC5
OPT_FAN or SYS_FAN4	N/A
THRMTRIP1	YES PIN60
THRMTRIP2	YES PIN94

IT8620E GPIO問題匯整	
PIN 50	GP26-第一次接上POWER時會拉 LO
PIN 90/91	DEFAULT為HDLED FUNCTION, GP93 BYPASS TO GP92 高溫時 GP92 會被拉Lo(ITE BUG)
PIN 108	GP40--- POWER ON 時會拉 LO
PIN 111/112	MOUSE 跟FAN6 FUNCTION 擇一使用,不然會互相干擾
PIN 22	PIN22，需高於3V，若低於接部分COM PORT及LPT裝置蜂鳴器會異常動作。

JP2	1	Disable WDT
	0	Enable WDT to rest PWROK
JP3	1	SPI-Flash Disable
	0	SPI-Flash Enable
JP4	1	k8 power sequency function is Disable
	0	k8 power sequency function is Enable
JP5	1	anti-surge Disable
	0	anti-surge Enable
JP3 JP5	1 1	The default value of EC Index 63h/6Bh/73h is 80h.
	1 0	The default value of EC Index 63h/6Bh/73h is FFh
	0 1	The default value of EC Index 63h/6Bh/73h is 00h.
	0 0	The default value of EC Index 63h/6Bh/73h is 40h.

www.aitech1.ru

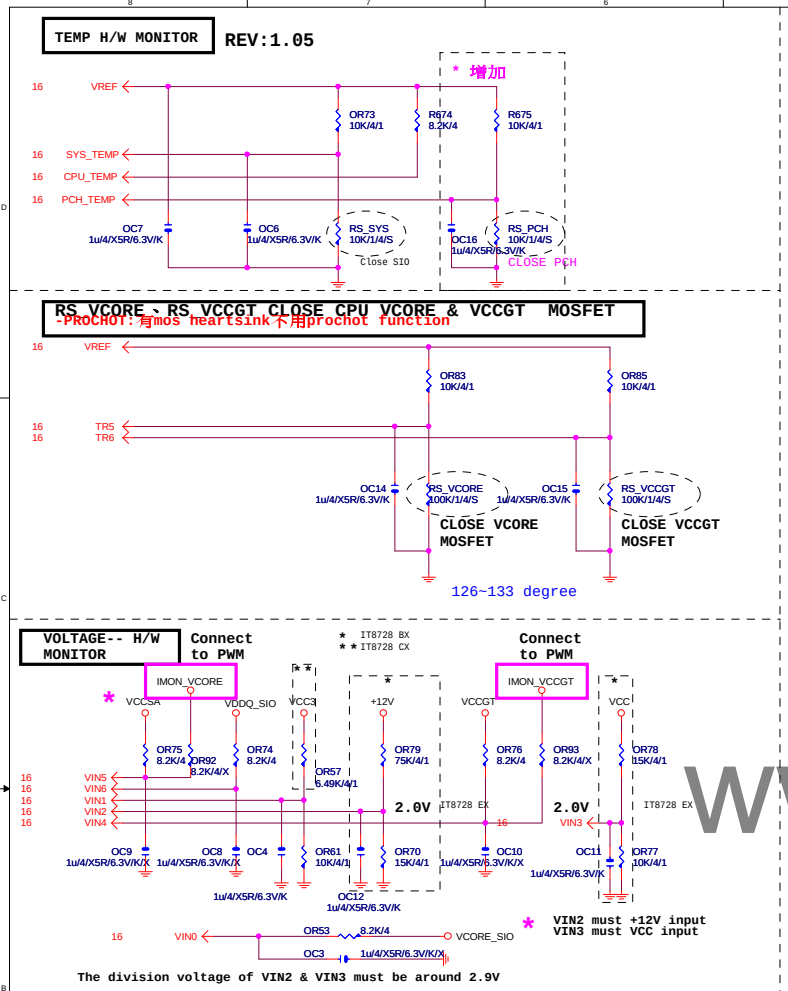

www.aitech1.ru

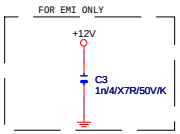

Gigabyte Technology		
Title: HWM,KB/MS, FAN CTRL		
Size: Custom	Document Number: GA-P110-D3	Rev: 1.0
Date: Monday, April 11, 2016	Sheet 17 of 50	

Rev: 0.61

CPU SMART FAN

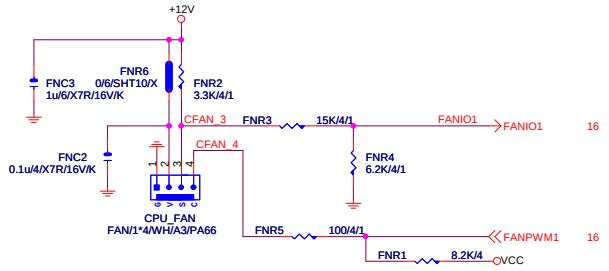

SYSTEM FAN1

Linear SYS_FAN

Enable Function (NCT3941S)
Full Turn On Function (NCT3941S-A)

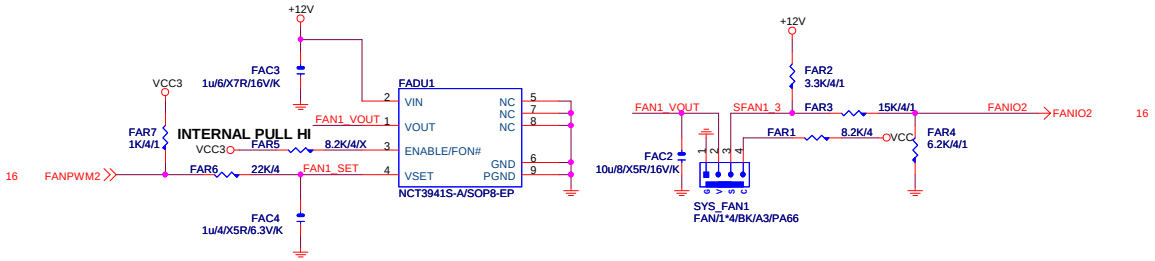

SYSTEM FAN3

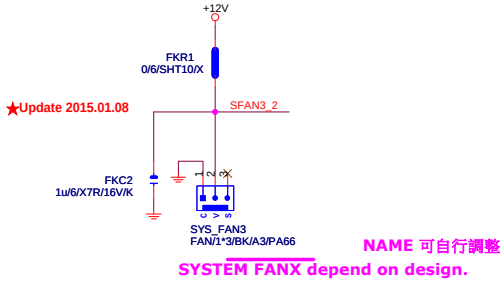

SYSTEM FAN2

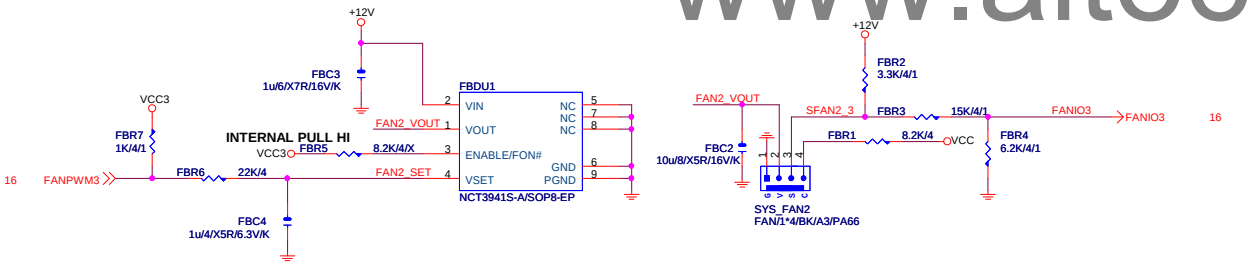

www.aitech1.ru

GIGABYTE		
Title: HWM,KB/MS, FAN CTRL		
Size: Custom	Document Number: GA-P110-D3	Rev: 1.0
Date: Monday, April 11, 2016	Sheet 18 of 50	

Rev 0.2

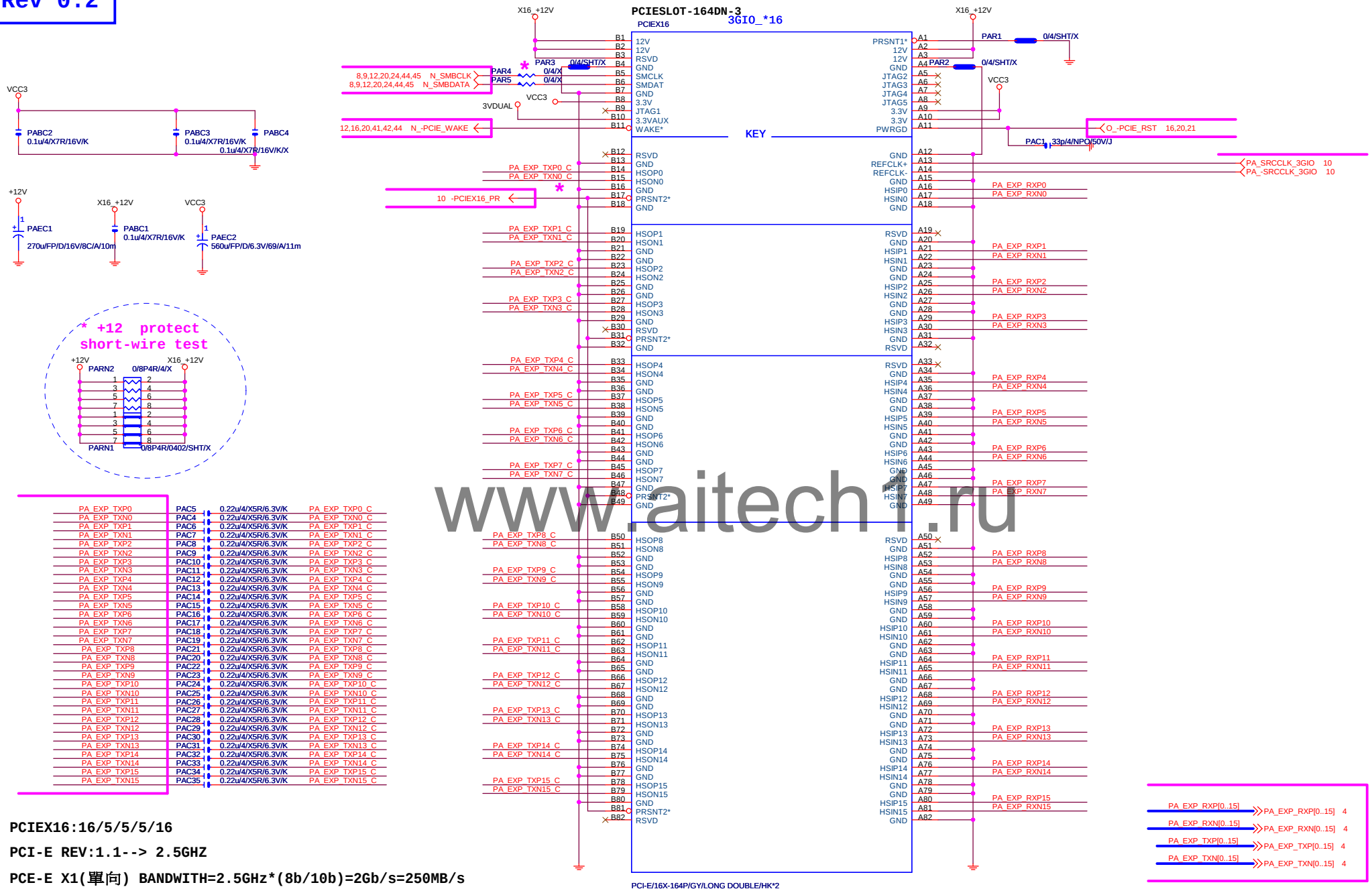

www.aitech1.ru

PCIEX16:16/5/5/5/16

PCI-E REV:1.1--> 2.5GHZ

PCE-E X1(單向) BANDWITH=2.5GHz*(8b/10b)=2Gb/s=250MB/s

PCE-E X1(雙向) BANDWITH=2.5GHz*(8b/10b)X2=4Gb/s=500MB/s

PCE-E X16(單向) BANDWITH=2.5GHz*(8b/10b)X16=32Gb/s=4GB/s

PCE-E X16(雙向) BANDWITH=2.5GHz*(8b/10b)X16X2=64Gb/s=8GB/s

PCI-E REV:2.0--> 5GHZ

PA_EXP_TXP0	PAC5	0.22u/4/X5R/6.3V/K	PA_EXP_TXP0_C
PA_EXP_TXN0	PAC4	0.22u/4/X5R/6.3V/K	PA_EXP_TXN0_C
PA_EXP_TXP1	PAC6	0.22u/4/X5R/6.3V/K	PA_EXP_TXP1_C
PA_EXP_TXN1	PAC7	0.22u/4/X5R/6.3V/K	PA_EXP_TXN1_C
PA_EXP_TXP2	PAC8	0.22u/4/X5R/6.3V/K	PA_EXP_TXP2_C
PA_EXP_TXN2	PAC9	0.22u/4/X5R/6.3V/K	PA_EXP_TXN2_C
PA_EXP_TXP3	PAC10	0.22u/4/X5R/6.3V/K	PA_EXP_TXP3_C
PA_EXP_TXN3	PAC11	0.22u/4/X5R/6.3V/K	PA_EXP_TXN3_C
PA_EXP_TXP4	PAC12	0.22u/4/X5R/6.3V/K	PA_EXP_TXP4_C
PA_EXP_TXN4	PAC13	0.22u/4/X5R/6.3V/K	PA_EXP_TXN4_C
PA_EXP_TXP5	PAC14	0.22u/4/X5R/6.3V/K	PA_EXP_TXP5_C
PA_EXP_TXN5	PAC15	0.22u/4/X5R/6.3V/K	PA_EXP_TXN5_C
PA_EXP_TXP6	PAC16	0.22u/4/X5R/6.3V/K	PA_EXP_TXP6_C
PA_EXP_TXN6	PAC17	0.22u/4/X5R/6.3V/K	PA_EXP_TXN6_C
PA_EXP_TXP7	PAC18	0.22u/4/X5R/6.3V/K	PA_EXP_TXP7_C
PA_EXP_TXN7	PAC19	0.22u/4/X5R/6.3V/K	PA_EXP_TXN7_C
PA_EXP_TXP8	PAC21	0.22u/4/X5R/6.3V/K	PA_EXP_TXP8_C
PA_EXP_TXN8	PAC20	0.22u/4/X5R/6.3V/K	PA_EXP_TXN8_C
PA_EXP_TXP9	PAC22	0.22u/4/X5R/6.3V/K	PA_EXP_TXP9_C
PA_EXP_TXN9	PAC23	0.22u/4/X5R/6.3V/K	PA_EXP_TXN9_C
PA_EXP_TXP10	PAC24	0.22u/4/X5R/6.3V/K	PA_EXP_TXP10_C
PA_EXP_TXN10	PAC25	0.22u/4/X5R/6.3V/K	PA_EXP_TXN10_C
PA_EXP_TXP11	PAC26	0.22u/4/X5R/6.3V/K	PA_EXP_TXP11_C
PA_EXP_TXN11	PAC27	0.22u/4/X5R/6.3V/K	PA_EXP_TXN11_C
PA_EXP_TXP12	PAC28	0.22u/4/X5R/6.3V/K	PA_EXP_TXP12_C
PA_EXP_TXN12	PAC29	0.22u/4/X5R/6.3V/K	PA_EXP_TXN12_C
PA_EXP_TXP13	PAC30	0.22u/4/X5R/6.3V/K	PA_EXP_TXP13_C
PA_EXP_TXN13	PAC31	0.22u/4/X5R/6.3V/K	PA_EXP_TXN13_C
PA_EXP_TXP14	PAC32	0.22u/4/X5R/6.3V/K	PA_EXP_TXP14_C
PA_EXP_TXN14	PAC33	0.22u/4/X5R/6.3V/K	PA_EXP_TXN14_C
PA_EXP_TXP15	PAC34	0.22u/4/X5R/6.3V/K	PA_EXP_TXP15_C
PA_EXP_TXN15	PAC35	0.22u/4/X5R/6.3V/K	PA_EXP_TXN15_C

Gigabyte Technology

Title: PCI EXPRESS * 16

Size: Custom | Document Number: GA-P110-D3 | Rev: 1.0

Date: Monday, April 11, 2016 | Sheet 19 of 50

PCIEX1 SLOT

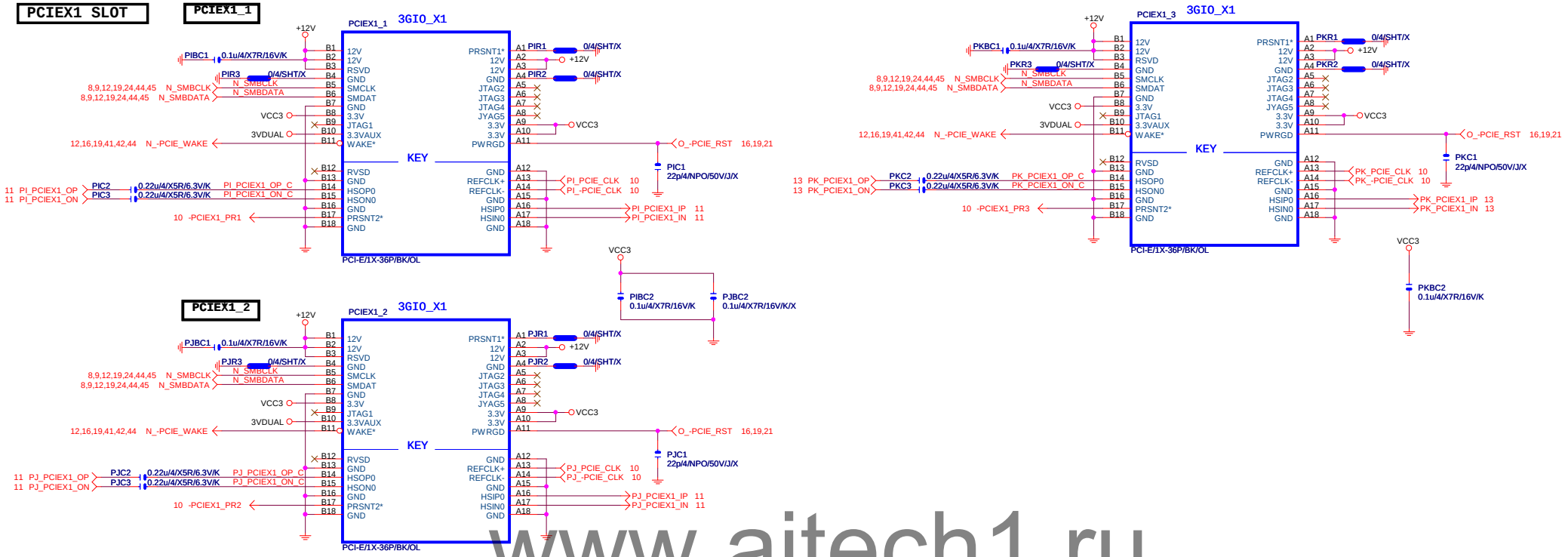

www.aitech1.ru

Gigabyte Technology		
Title: PCIEX1		
Size: Custom	Document Number: GA-P110-D3	Rev: 1.0
Date: Monday, April 11, 2016	Sheet 20 of 50	

Rev 0.6

M.2 Lane1 from PCH port9

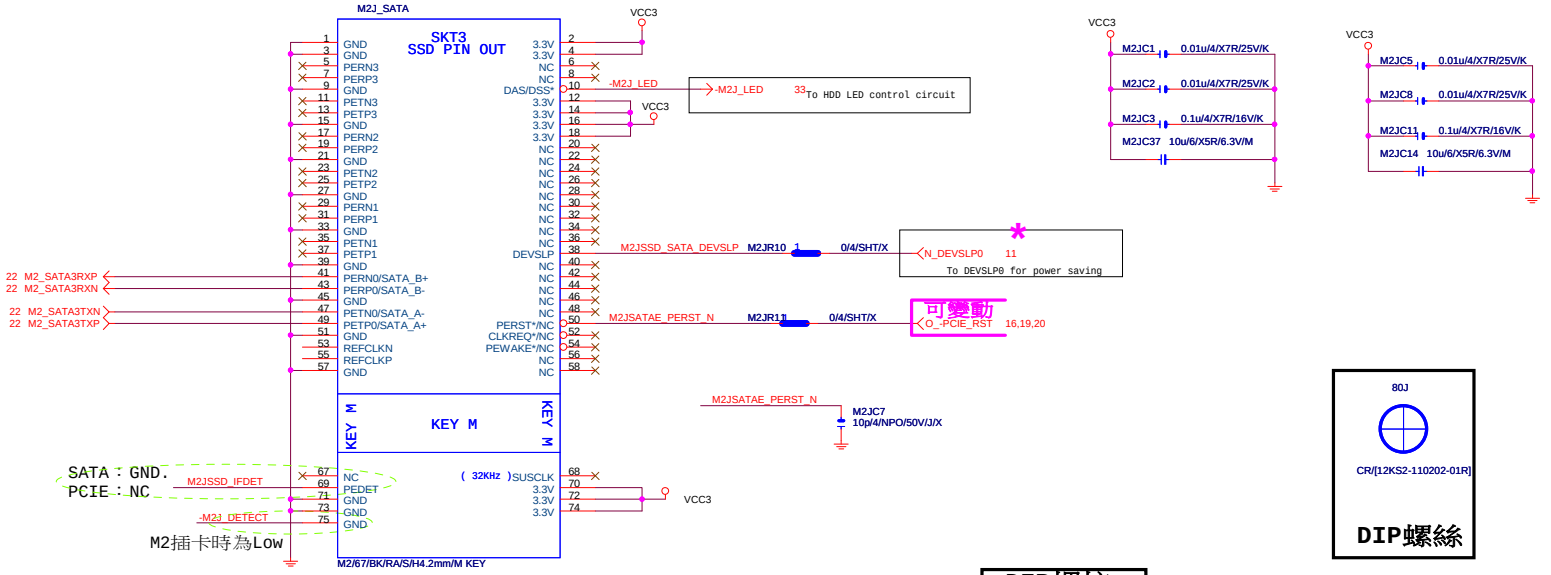

支援SATA and M.2 function

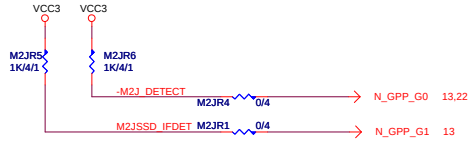

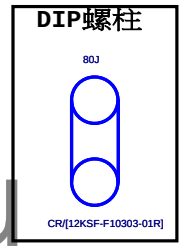

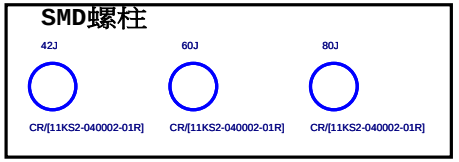

M.2 有插卡/沒插卡 GPP_G0	M.2插何種卡？ GPP_G1	SATA Express 插何種硬碟？ GPP_E0/E2/F1	IO15 (S0)	IO16 (S1)	IO17	IO18	IO19 (S0)	IP20 (S1)
有插卡 (Low)	SATA Mode (Low)	SATA (Hi)	SATA (M.2)	PCIE x1	PCIE x1	PCIE X1	PCIE x1	SATA
		SATA Express (Low)	SATA (M.2)	PCIE x1	PCIE x1	PCIE x1	SATA Express	
	PCIE Mode (Hi)	SATA (Hi)	PCIE x4 (For M.2)				SATA	SATA
		SATA Express (Low)	PCIE x4 (For M.2)				SATA Express	
沒插卡 (Hi)	Don't Care (Hi)	SATA (Hi)	PCIE x4				SATA	SATA
		SATA Express (Low)	PCIE x4				SATA Express	

www.aitech1.ru

Gigabyte Technology

Title: M.2 X4

Size: Custom | Document Number: GA-P110-D3 | Rev: 1.0

Date: Monday, April 11, 2016 | Sheet 21 of 50

Rev 0.9

PCH (S3)

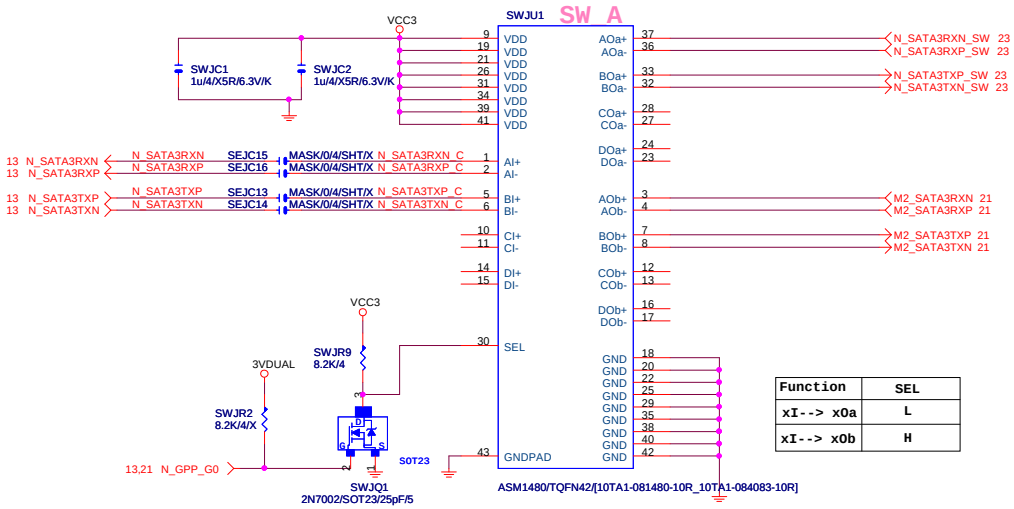

Function	SEL
xI--> xOa	L
xI--> xOb	H

www.aitech1.ru

Title	Gigabyte Technology NXP-PTN3356		
Size Custom	Document Number GA-P110-D3		Rev 1.0
Date: Monday, April 11, 2016	Sheet 22 of 50		

Rev 0.5a

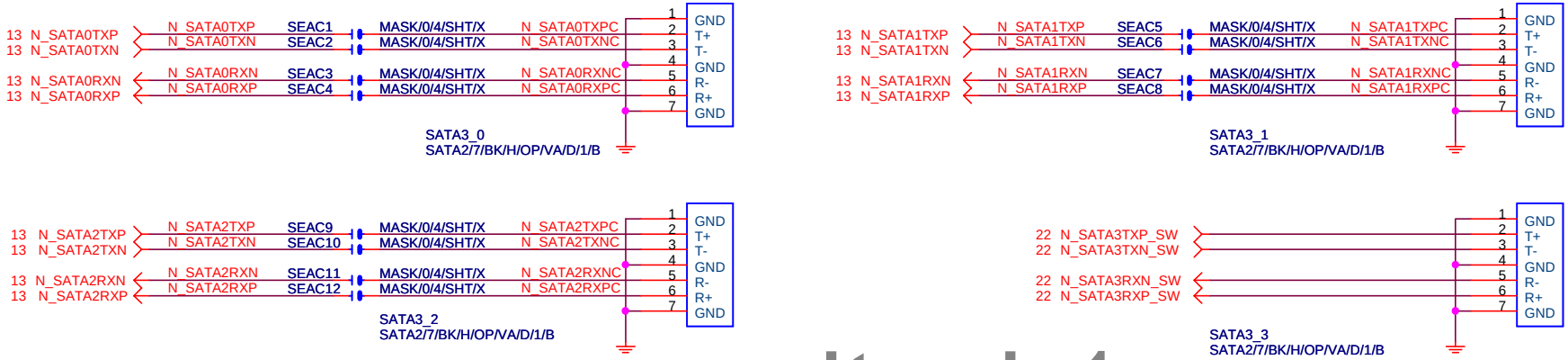

www.aitech1.ru

Gigabyte Technology		
Title: SATA EXPRESS		
Size: Custom	Document Number: GA-P110-D3	Rev: 1.0
Date: Monday, April 11, 2016	Sheet 23 of 50	

REV:0.15

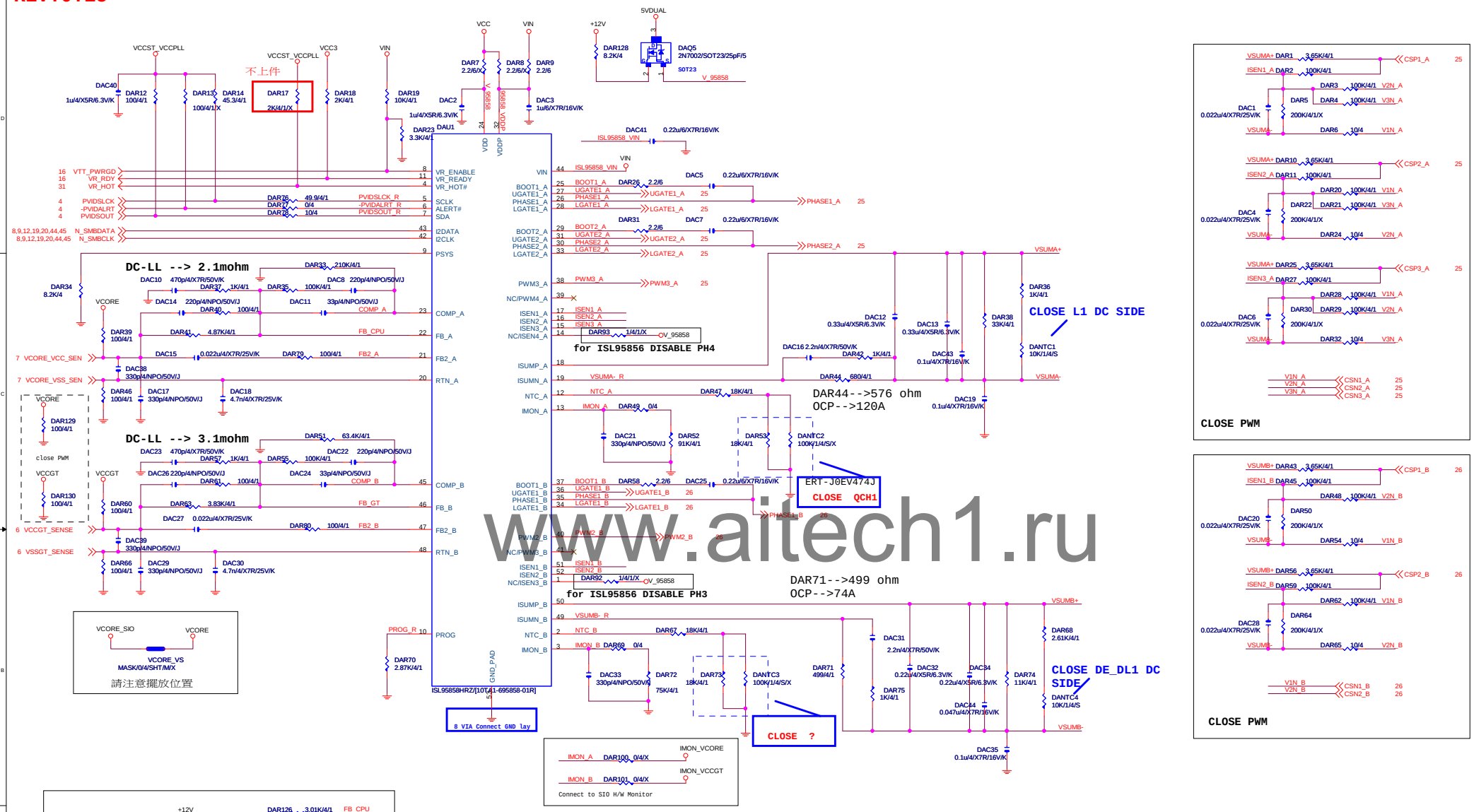

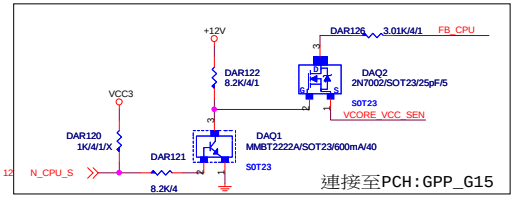

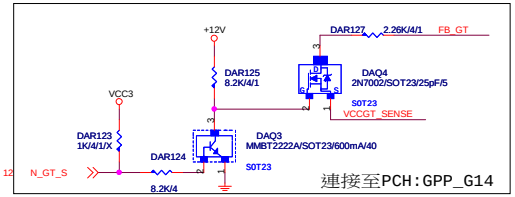

www.aitech1.ru

GIGABYTE™

Title: ISL95858_PWM

Size: Custom | Document Number: GA-P110-D3 | Rev: 1.0

Date: Monday, April 11, 2016 | Sheet 24 of 50

REV:0.91

VCORE

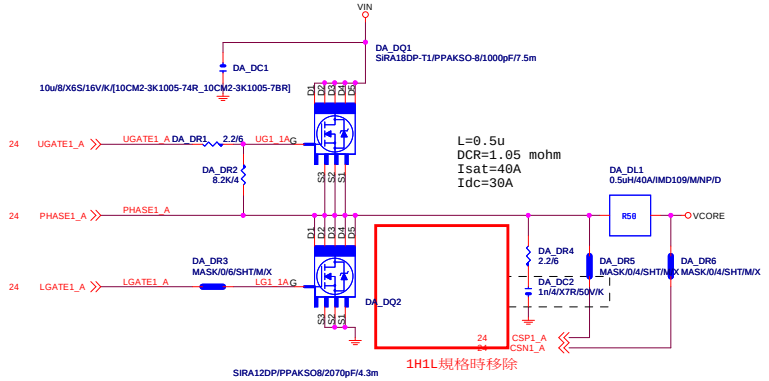

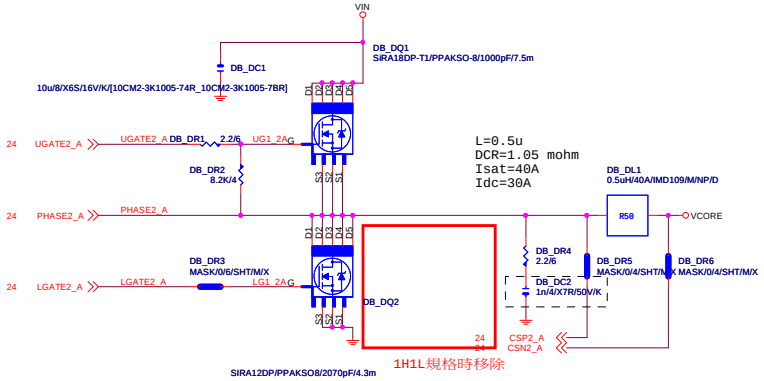

VIN CAP 270u*3PCS

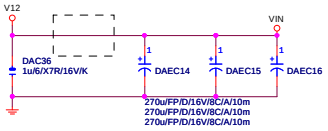

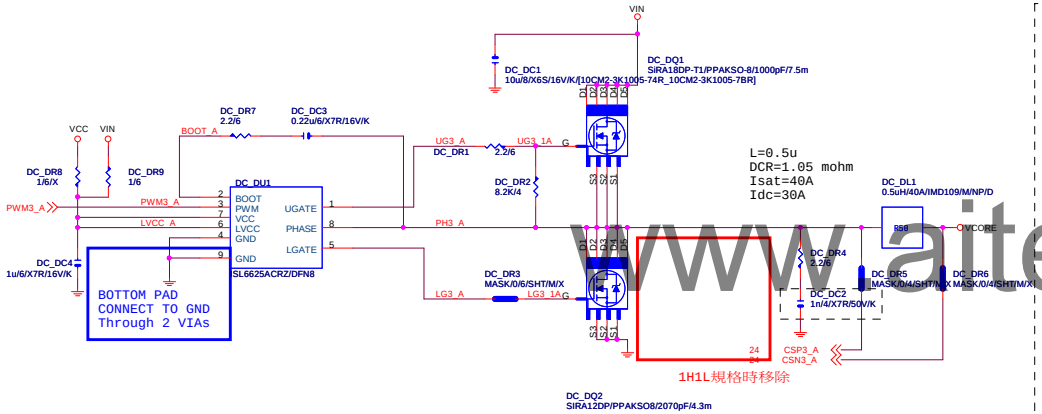

VCORE CAP 560u*4PCS 10u*10PCS

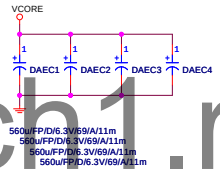

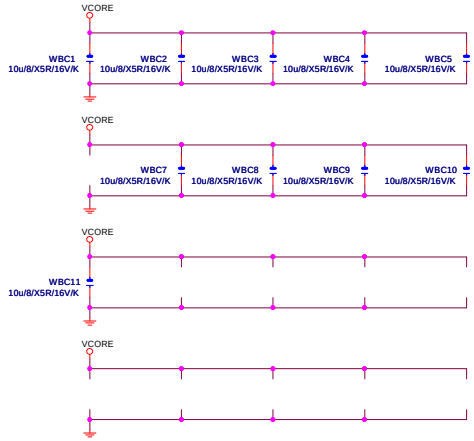

www.aitech1.ru

GIGABYTE™

Title	ISL95858_MOS	
Size: Custom	Document Number: GA-P110-D3	Rev: 1.0
Date: Monday, April 11, 2016	Sheet 25 of 50	

REV:0.91

VCCGT

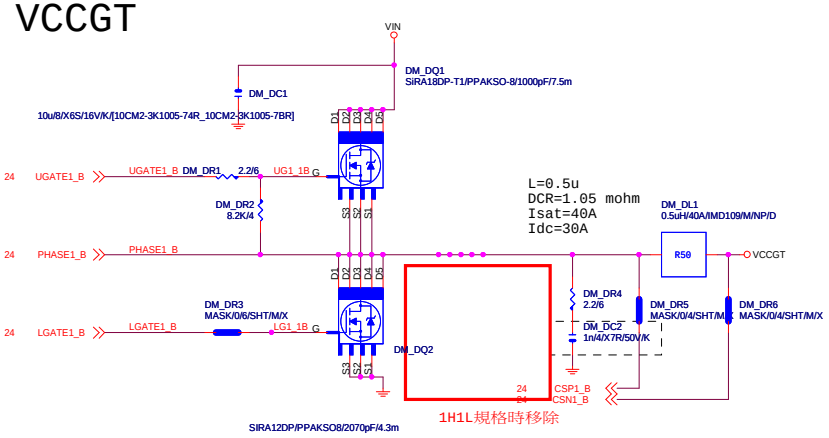

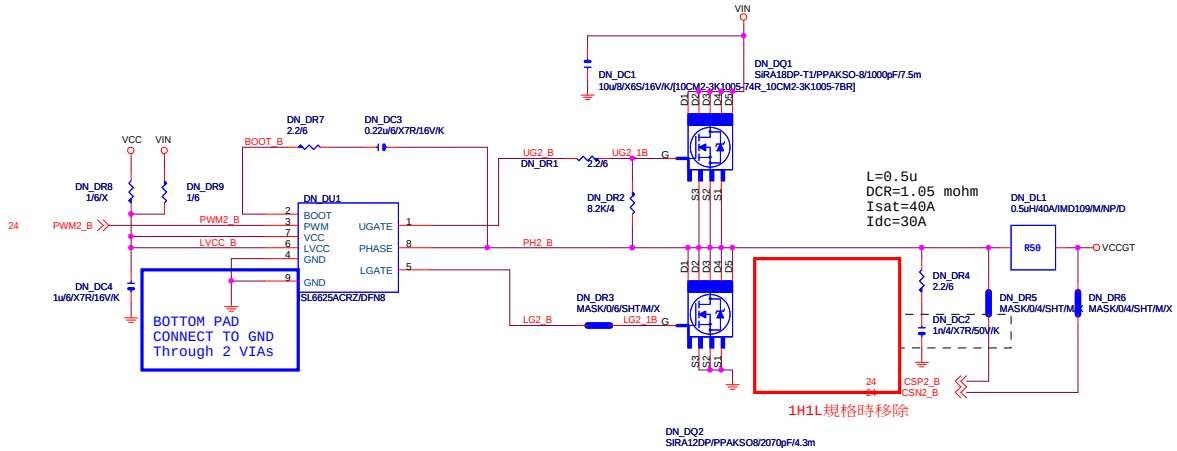

VCCGT CAP

560u*2PCS
10u*2PCS

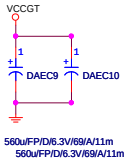

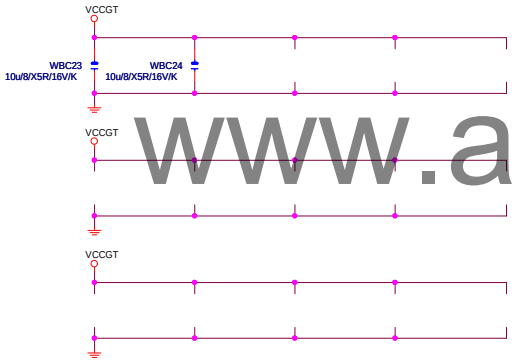

www.aitech1.ru

GIGABYTE™

Title	ISL95858_MOS	
Size: Custom	Document Number: GA-P110-D3	Rev: 1.0
Date: Monday, April 11, 2016	Sheet 26 of 50	

REV:0.4

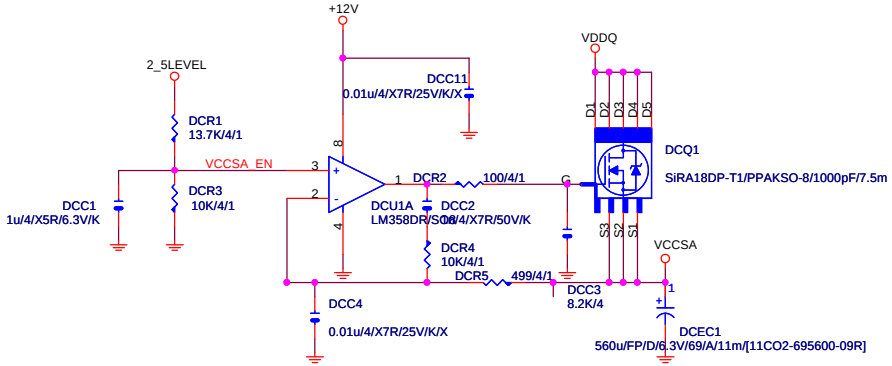

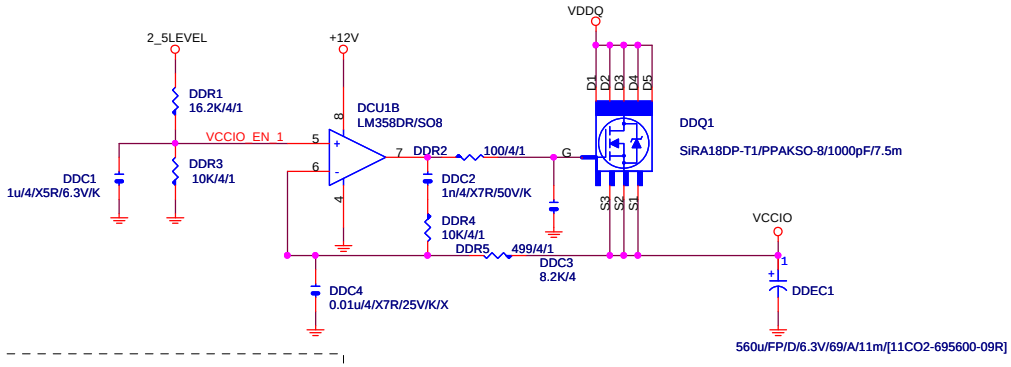

VCCIO_EN_1 DDR10 0/4 VCCIO_EN 16

Connect to IT8620

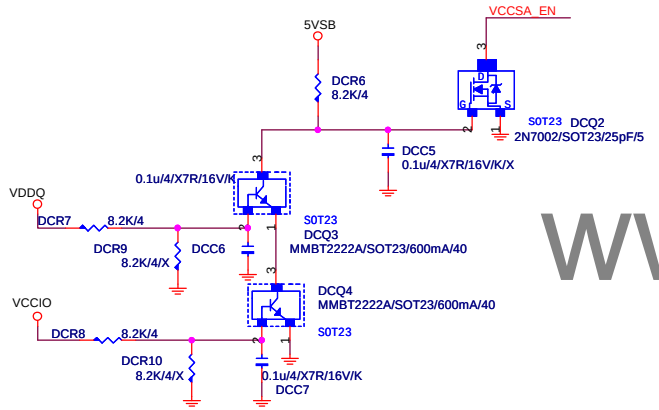

www.aitech1.ru

VCCST_VCCPLL

REV:0.21

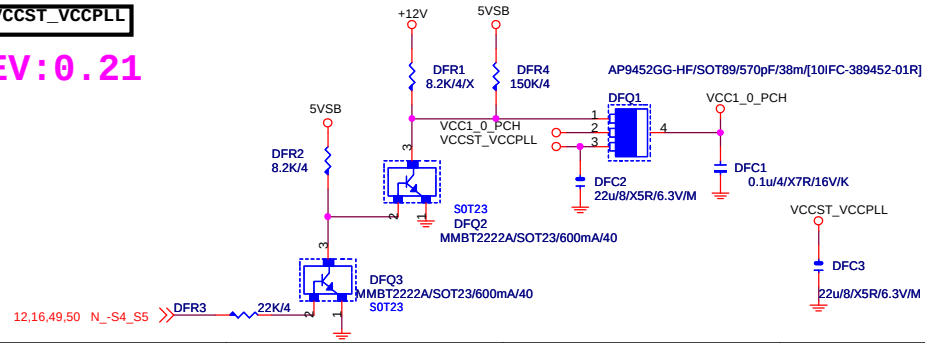

GIGABYTE™

Title	VCCSA_VCCIO	
Size: Custom	Document Number: GA-P110-D3	Rev: 1.0
Date: Monday, April 11, 2016	Sheet 27 of 50	

REV:0.4

DDR4

L=0.5u
DCR=2.1 mohm
Isat=20A
Idc=15A

DDR VIN CAP
560u*2PCS

CHOKE與CAP料號可變

5VDUAL
MAR2 8.2K/4
MA_EN
上件

MA_DR8 2.2/6
DRV_DDR
MA_DC10 1u/6/X7R/16V/K
MA_DR37 100K/4/1
VDDQ_GD
MA_DC9 0.1u/6/X7R/25V/K
VPP_25V
MA_DR40 8.2K/4/X
MA_DR41 8.2K/4
50 VPP25V_GD
MA_DR38 MASK/0/4/SHT/M/10/X
DDR_EN
16,50 MA_EN
MA_DR39 0/4/X
MA_DC15 0.1u/4/X7R/16V/K
EN PGOOD VCC BOOT UGATE PHASE FB CS RF LGATE GND
MAU2 RT8237/[10TA1-608237-01R]
MA_UGATE
MA_PHASE
MA_LGATE
MA_RF
MA_DR45 470K/4/1
MA_DR15 182K/4/1
MA_DR19 470K/4/1/X

MA_L2 47/4030/15A/S
BEAD
MA_DC6 0.1u/4/X7R/16V/K Close Choke
MA_VIN
MA_DC7 1u/6/X7R/16V/K Close MOS
MAEC1 560u/FP/D/6.3V/69/A/11m
MA_DQ1 SIRA12DP/PPAKSO8/2070pF/4.3m
MA_UGATE MA_DR1 2.2/6
MA_DR2 8.2K/4
MA_PHASE
MA_DQ2
MA_LGATE MA_DR9 2.2/6 MA_LG
SIRA12DP/PPAKSO8/2070pF/4.3m
MA_L1 1uH/35A/IMD109/M/D
R50
10*10
MA_DR5 2.2/6
MA_DC5 1n/4/X7R/50V/K
1H1L規格移除
VDDQ
SUPPORT DDR4
1.2V
25A MAX
MA_DR13 2K/4/1
MA_DC14 22p/4/NPO/50V/J/X
RS
L=1u
DCR=2.5 mohm
Isat=35A
Idc=28A
MAC60 22u/8/X5R/6.3V/M/X
請放置CHOKE一出來位置.先預留.
請自行確認ripple後再決定是否上件
Remote sense請從最重的負載端點拉回

MA_DR38..MA_DC15
VPP_25V使用8120.8068A.RT8237時上件

PIN7-->20mil
PIN1-->6mil
PIN2-->6mil
PIN5-->6mil
PIN3-->6mil

FS=290K
OCP=40A

MOSFET請依MOSFET使用規則.自行選擇
ON-->10IF9-040406-10R[NTMFS4C06N/N/PPAK/1400pF/4m]
VISHAY-->10IF9-040012-10R[SIRA12DP/PPAKSO8/2070pF/4.3m]

DDR_ADJ
16 GP25 MA_DR46 9.1K/4/1 1.35V
16 GP24 MA_DR22 26.1K/4/1 1.25V
16 GP21 MA_DR21 6.8K/4/1 1.4V
RO MA_DR12 2.8K/4/1

VDDQ_SIO VDDQ
DDR_VS MASK/0/4/SHT/M/X

PWR SEQ
CLOSE TO DDR POWER PLANE

DDR_EN
5VDUAL
MAQ6 2N7002/SOT23/25pF/5/X SOT23
VPP_25V
MAR108 22K/4/X
MAR9 10K/4/1/X
MAQ5 SOT23 MMBT2222A/SOT23/600mA/40/X
MAR107 5.11K/4/1/X
MAC3 0.1u/4/X7R/16V/K/X
16,50 MA_EN
MAR105 100K/4/1/X
Connect to IT8620
For power sequence require
MAR1 8.2K/4/X
MAQ10 2N7002/SOT23/25pF/5/X SOT23
12,16,49 N_-SLP_S3
MAQ11 2N7002/SOT23/25pF/5/X SOT23
MAC9 1u/6/X7R/16V/K/X
VPP_25V使用8120時上件

MAU1上RT9045時上件(不可MASK)
5VSB
MA_VTT_REF
MAR7 8.2K/4/X
MAQ2 2N7002/SOT23/25pF/5/X SOT23
MAQ3 SOT23 2N7002/SOT23/25pF/5/X
MAR6 8.2K/4/X
MAQ1 2N7002/SOT23/25pF/5/X SOT23
MAQ4 MMBT2222A/SOT23/600mA/40/X SOT23
MAR8 8.2K/4/X
4 DDR_VTT_CTL

DDRVTT
VDDQ
NCT3103S/SOP8/2A/[10GL2-203103-01R]
MAU1
VIN GND VREF1 VOUT VREF2 ENABLE VCNTL BOOT_SEL
DDRVTT_EN
DDRVTT_BOOT
MAC2 1u/4/X5R/6.3V/K
MAR5 1K/4/1
MAR4 1K/4/1
MAC1 0.01u/4/X7R/25V/K
MAC7 10u/6/X5R/6.3V/M
1.1A MAX
DDRVTT

DDR_VTT_CTL MAR110 0/4 DDRVTT_EN
N_-SLP_S3 MAR111 0/4 DDRVTT_BOOT
MAU1上NCT3103S時上件(不可以改short pad)

DDR CAP 560u*4PCS 22u*2PCS
VDDQ
MAEC3 560u/FP/D/6.3V/69/A/11m
MAEC4 560u/FP/D/6.3V/69/A/11m
* 大電容 x4
WBC49 22u/8/X5R/6.3V/M

DDRVTT CAP
DDRVTT
MAC4 22u/8/X5R/6.3V/M
* 大電容 x0

www.aitech1.ru

GIGABYTE™

Title	RT8237_DDR4 POWER
Size	Custom
Document Number	GA-P110-D3
Rev	1.0
Date:	Monday, April 11, 2016
Sheet	28 of 50

REV:0.50

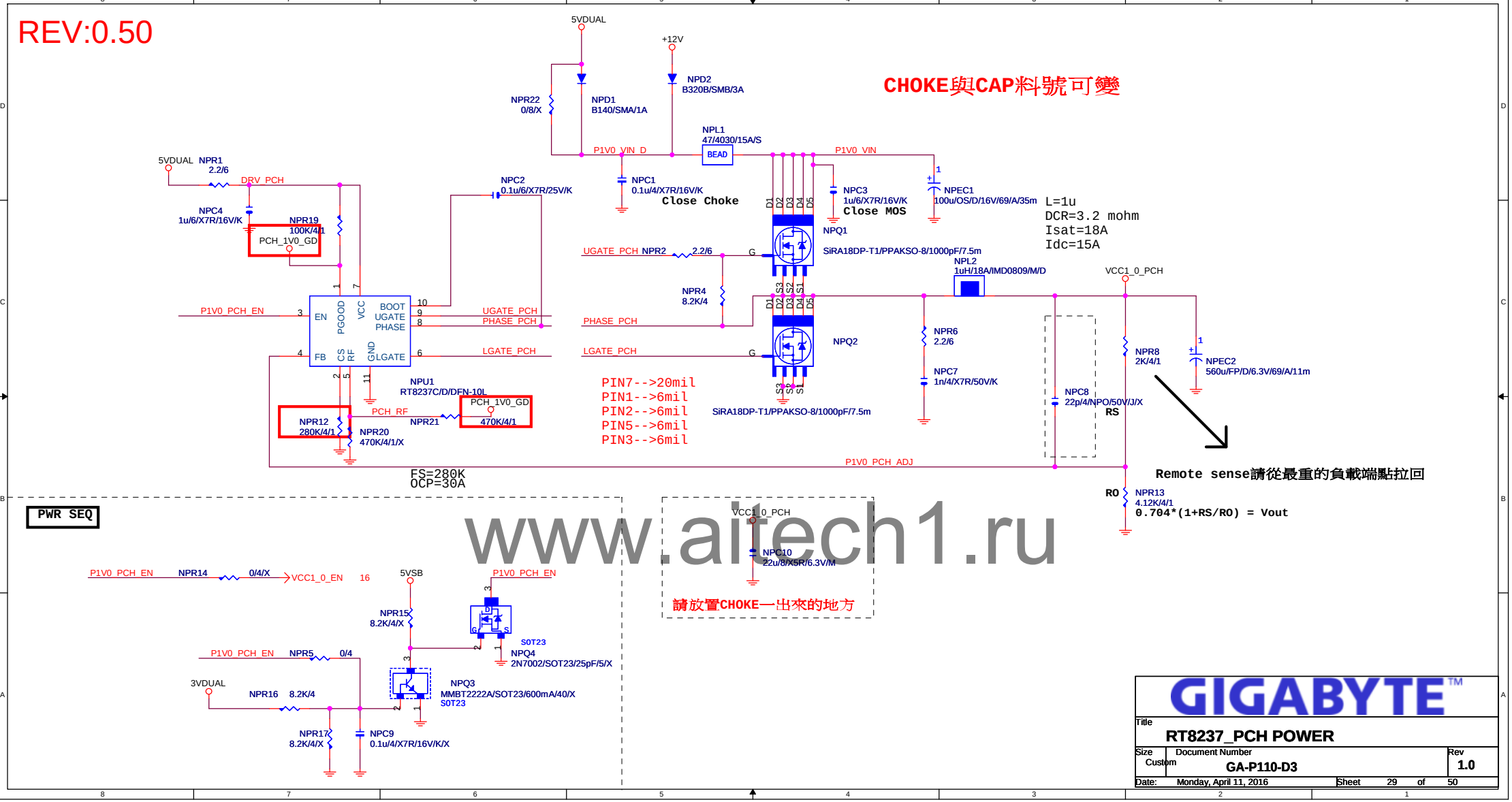

www.altech1.ru

GIGABYTE™

Title	RT8237_PCH POWER		
Size: Custom	Document Number: GA-P110-D3		Rev: 1.0
Date: Monday, April 11, 2016	Sheet 29 of 50		

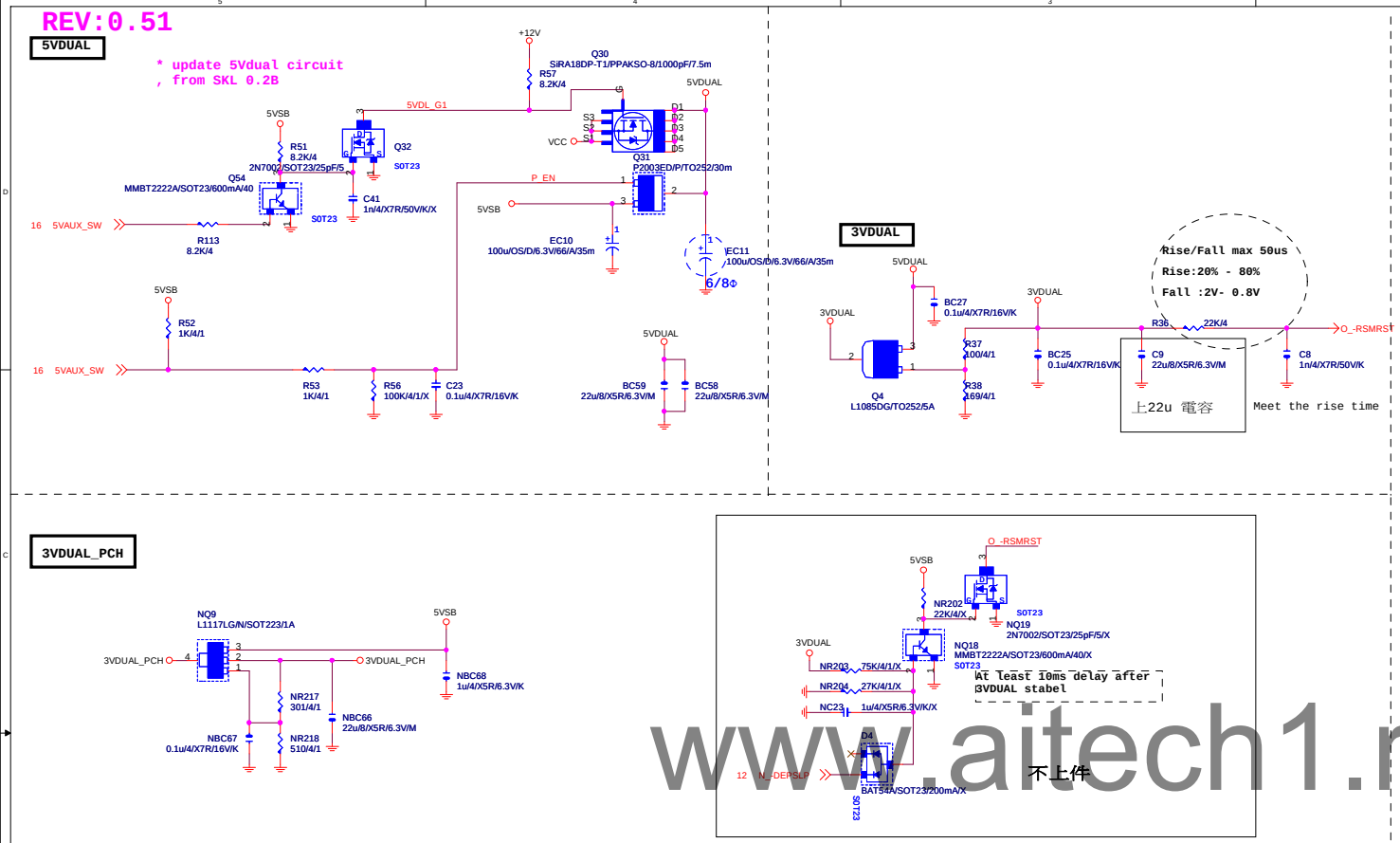

www.aitech1.ru

Gigabyte Technology			
Title: DISCRETE POWER			
Size: Custom	Document Number: GA-P110-D3		Rev: 1.0
Date: Monday, April 11, 2016	Sheet 30 of 50		

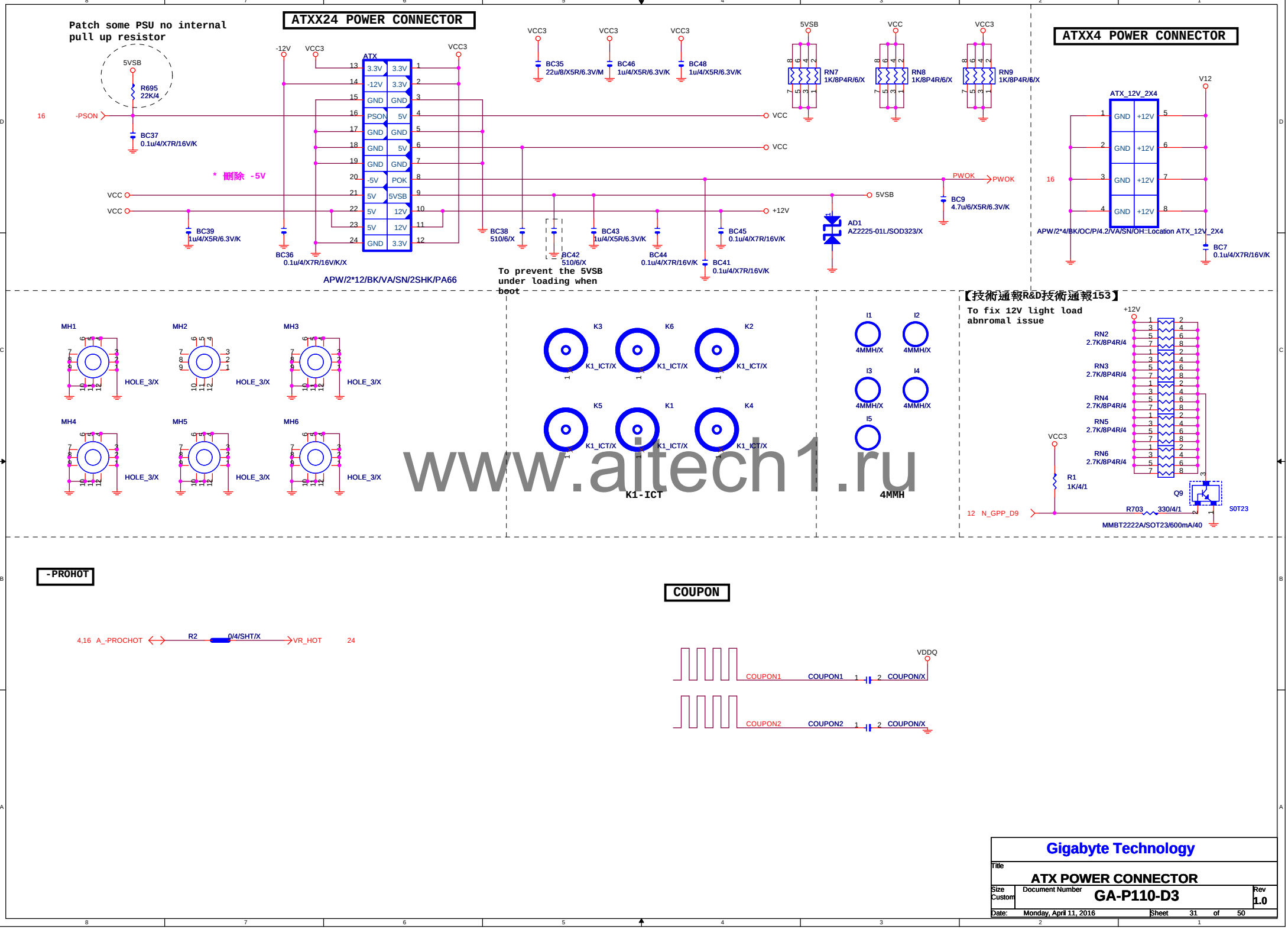

www.aitech1.ru

Rev: 0.55

KB/MS

KB/MS/DAC PWR

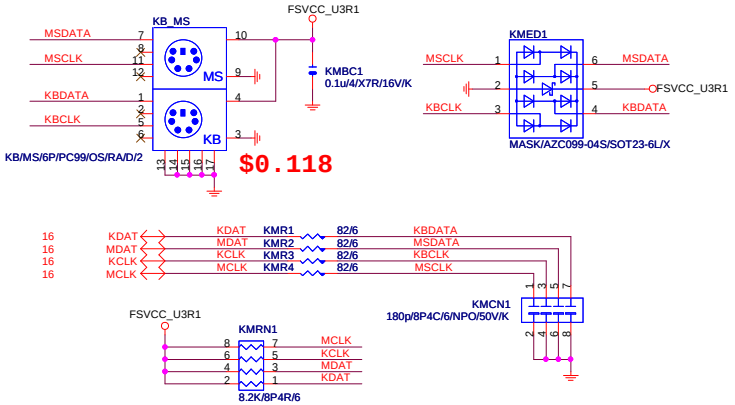

www.aitech1.ru

GIGABYTE		
Title	AUDIO JACK	
Size Custom	Document Number GA-P110-D3	Rev 1.0
Date: Monday, April 11, 2016	Sheet 32 of 50	

Rev: 0.61

FRONT PANEL

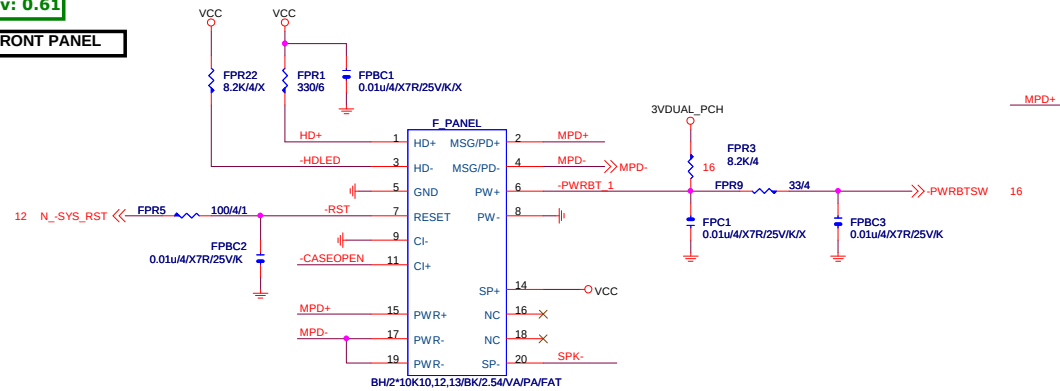

CASE OPEN

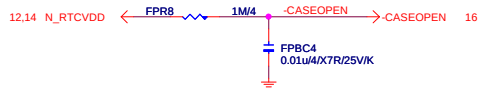

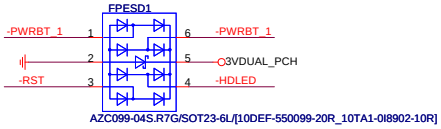

SATA LED

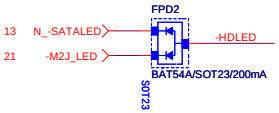

SPKR

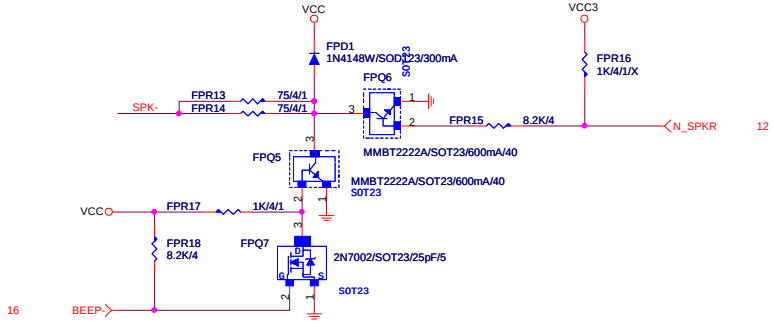

For SPKR voltage issue. FPQ6=>2222, FPQ7=>7002

www.aitech1.ru

Gigabyte Technology		
Title	FRONT PANEL	
Size Custom	Document Number GA-P110-D3	Rev 1.0
Date: Monday, April 11, 2016	Sheet 33 of 50	

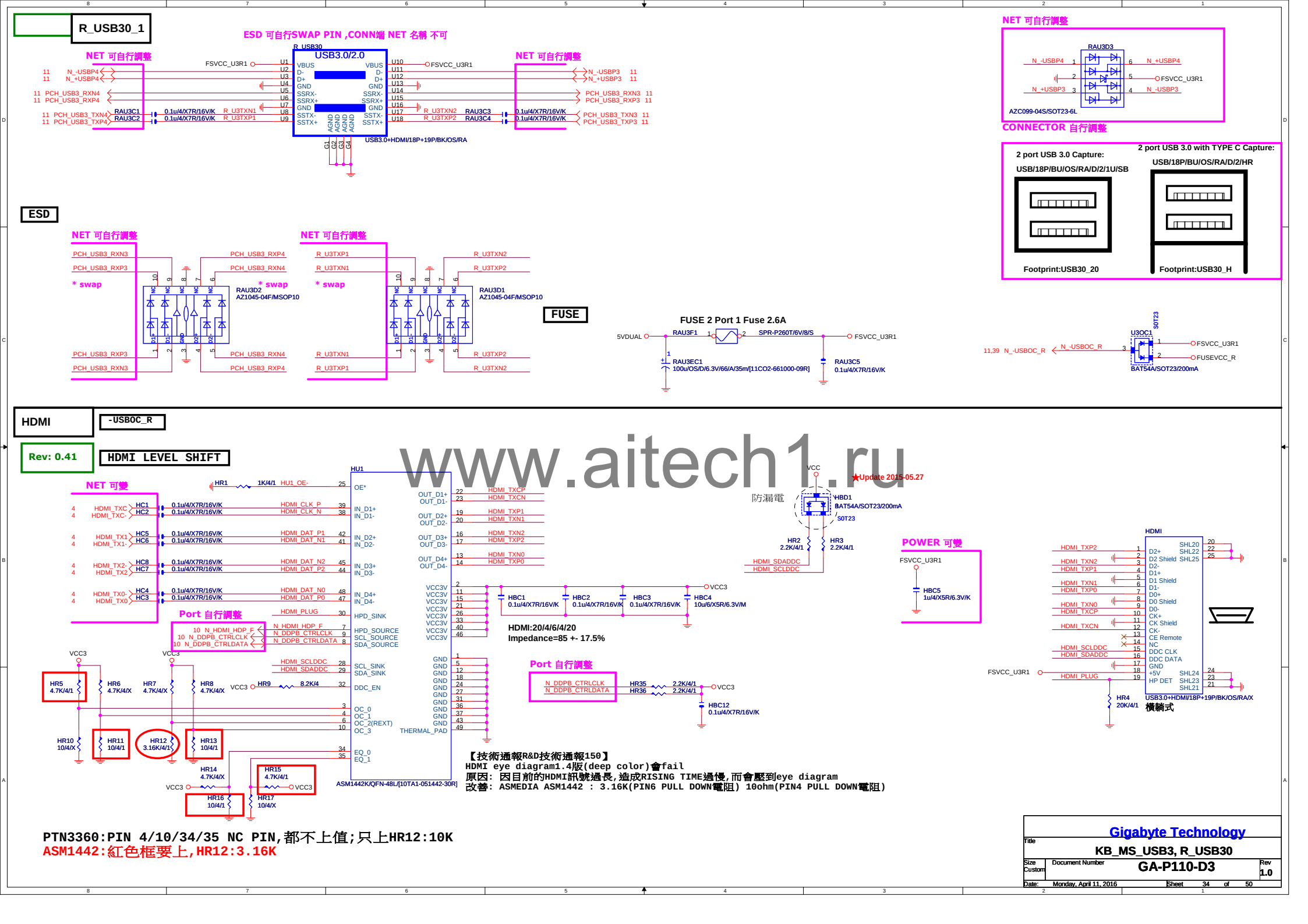

www.aitech1.ru

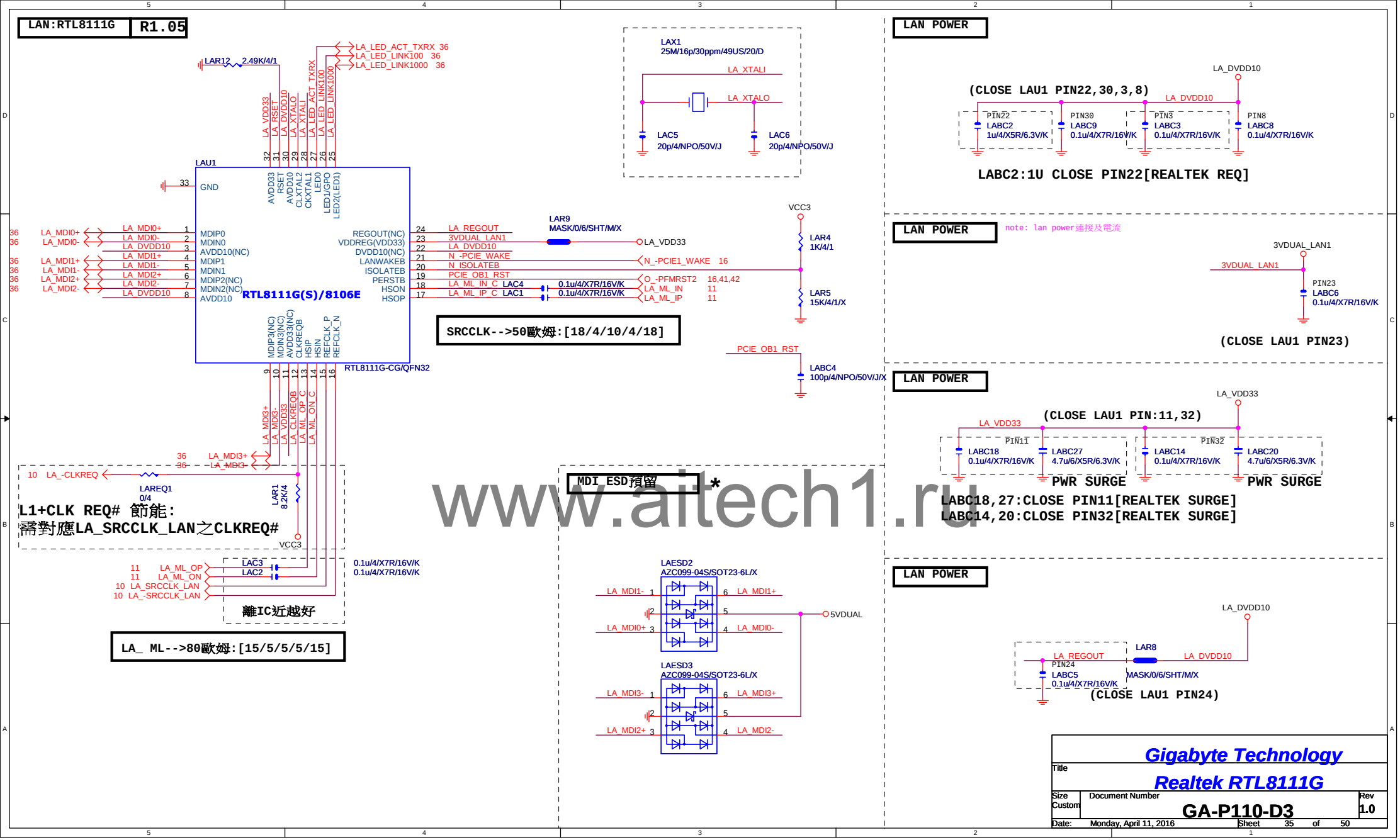

www.aitech1.ru

USB_LAN CONNECTOR R1.05

RMA ESD PROTECT

note:可變更USB NAME

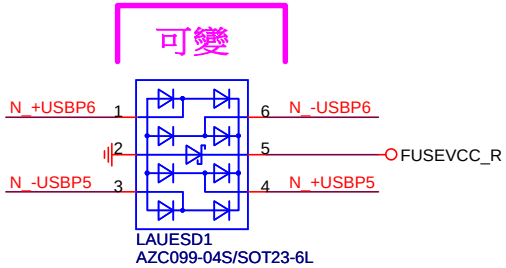

USB_LAN CONNECTOR

note:可變更USB NAME

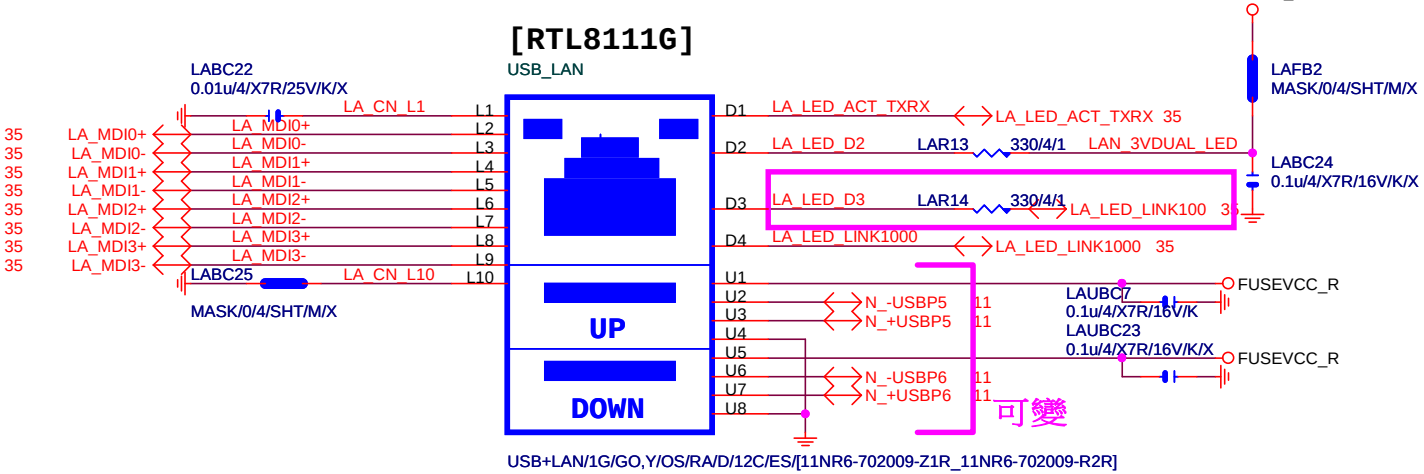

LA_MDI-->100歐姆:[20/4/8/4/20]

USB_LAN LAYOUT示意圖

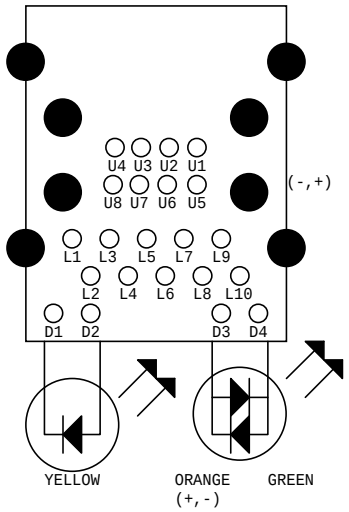

Dual Color LED

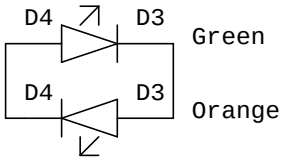

Single Color LED

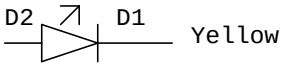

USB POWER

note:可變更FUSE

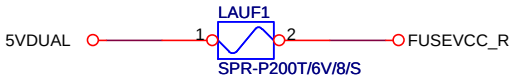

Close to connector

USB_LAN 2-Port 2.0A

FUSE-0805

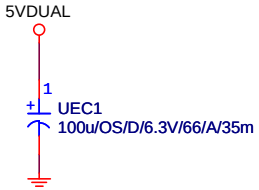

EMI SHORT PAD

PS:視EMI需求

LAN POWER

note: lan power連接及電流

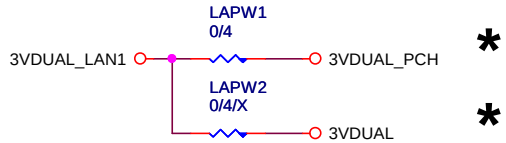

Title	**Gigabyte Technology**	
	LAN CONNECTOR-RTL8111G	
Size: Custom	Document Number: **GA-P110-D3**	Rev: 1.0
Date: Monday, April 11, 2016	Sheet 36 of 50	

www.altech1.ru

Rev 0.4

ALC887 三孔 AUDIO JACK

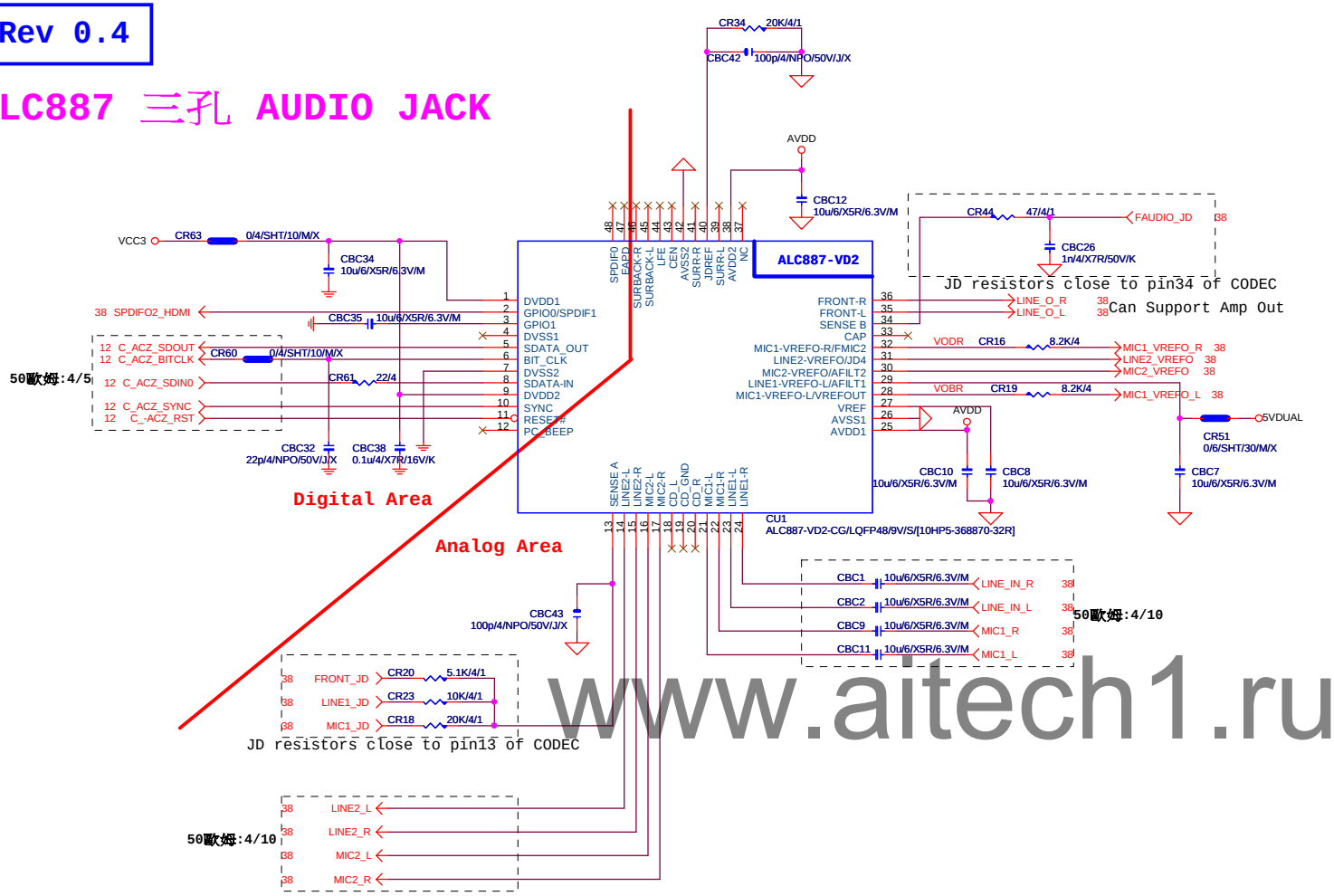

www.aitech1.ru

LAYOUT注意:螺絲孔下GND方式
1. MH1空間夠,下DGND
空間不夠,改為Isolate
2. MH2一律改為Isolate

MH1	MH2
DGND	Isolate

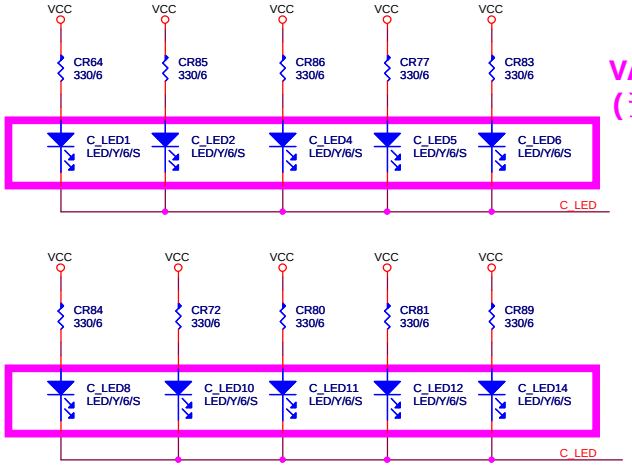

VALUE可變,LED顏色請自行修改
(預設:低亮度黃色LED:LED/Y/6/S)

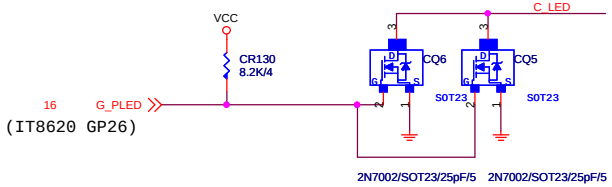

LAYOUT注意:要加
GND切割線

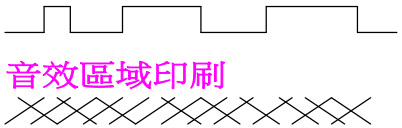

音效區域印刷

BOM OPTION : 1. Chemicon音效電容
2. 金屬外罩 Reserve (上件與否,依照各Model spec)
3. LED Reserve (上件與否和LED顏色,依照各Model spec)

Gigabyte Technology		
Title	HD AUDIO ALC887	
Size Custom	Document Number GA-P110-D3	Rev 1.0
Date: Monday, April 11, 2016	Sheet 37 of 50	

Rev 0.5

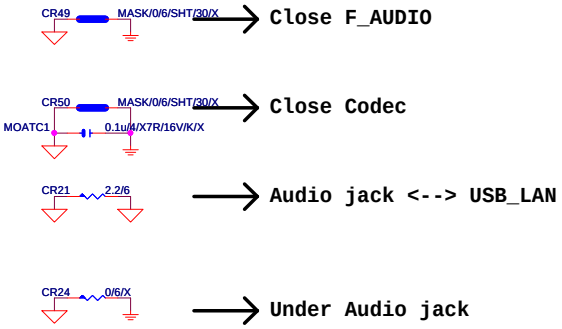

*量產前,0ohm改short pad

LINE-OUT

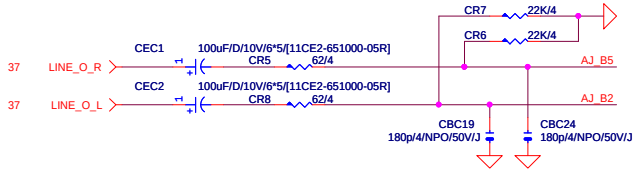

LINE-IN

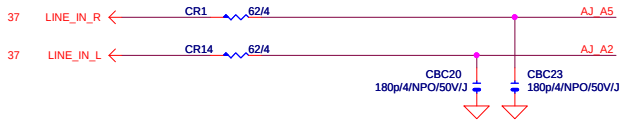

MIC-IN

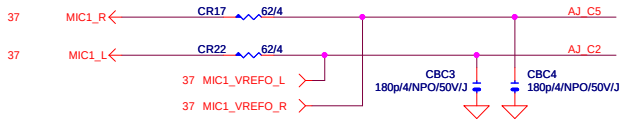

SURROUND

SPDIF_OUT

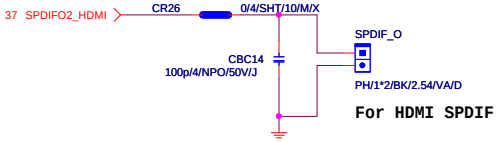

SPDIF_IN

www.aitech1.ru

CEN/LFE

AZALIA JACK

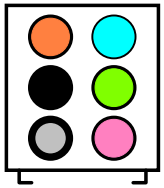

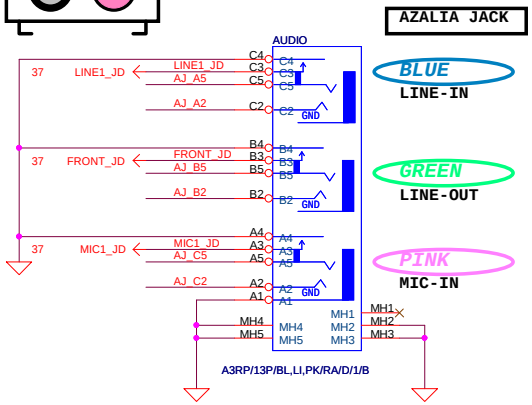

SURR BACK

AZALIA FRONT PANEL

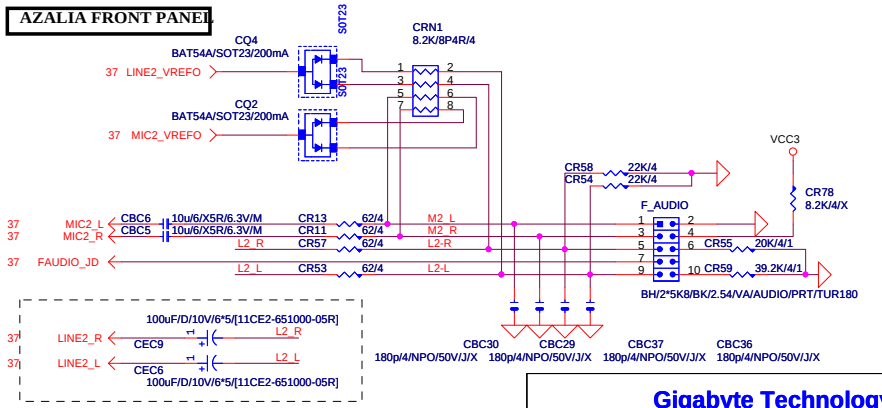

Gigabyte Technology			
Title: AUDIO JACK			
Size: Custom	Document Number: GA-P110-D3		Rev: 1.0
Date: Monday, April 11, 2016	Sheet 38 of 50		

Rev: 0.53

Front USB3.0

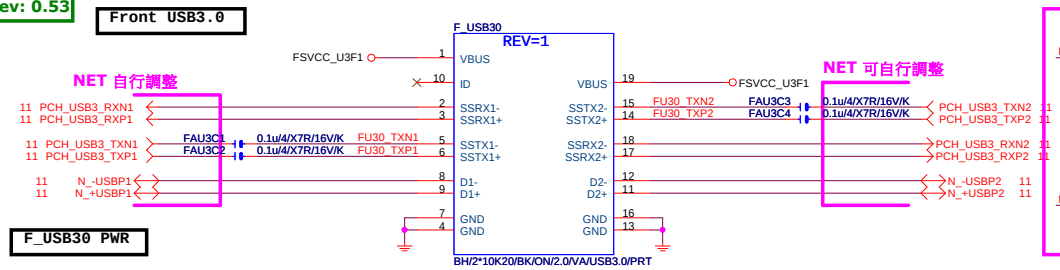

F_USB30 PWR

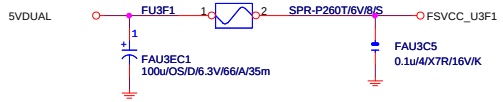

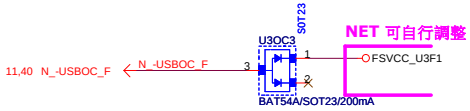

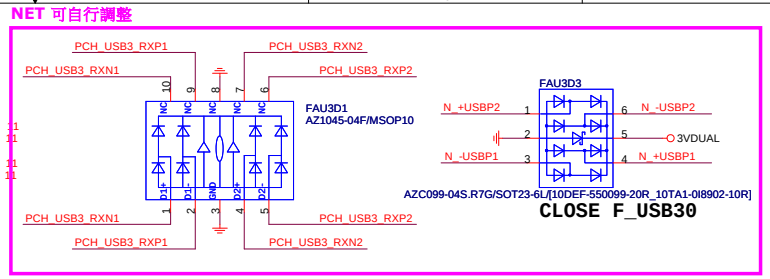

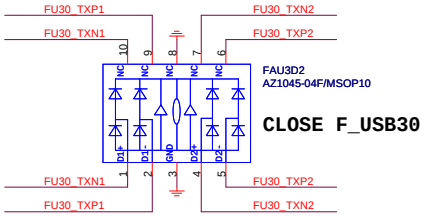

www.aitech1.ru

-USBOC_F

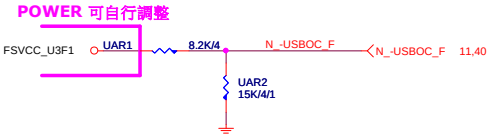

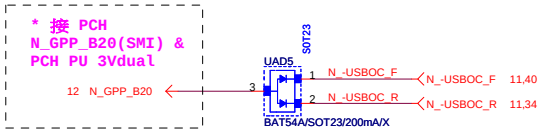

Gigabyte Technology			
Title	R_USB30,F_USB30, USB_OC		
Size Custom	Document Number GA-P110-D3		Rev 1.0
Date: Monday, April 11, 2016	Sheet 39 of 50		

Rev: 0.53

FRONT USB1

NET 可變

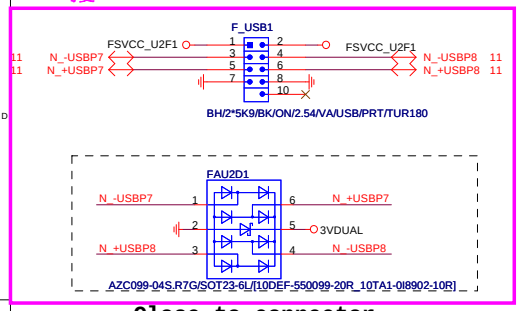

Close to connector

FUSE 2 Port 1 Fuse 2A

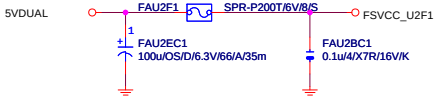

FRONT USB2

NET 可變

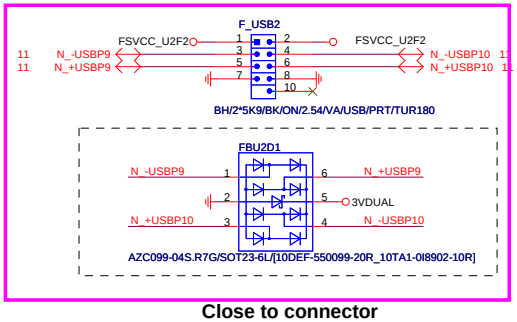

Close to connector

FUSE 2 Port 1 Fuse 2A

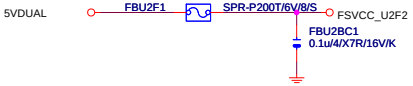

FRONT USB3

FRONT USB4

REAR USB1

REAR USB2

F_USB 2.0 OC SIGNAL

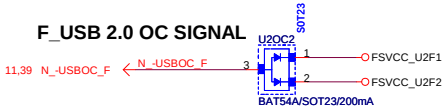

www.aitech1.ru

Gigabyte Technology		
Title: USB2.0		
Size: Custom	Document Number: GA-P110-D3	Rev: 1.0
Date: Monday, April 11, 2016	Sheet 40 of 50	

Rev: 0.54

COM PORT

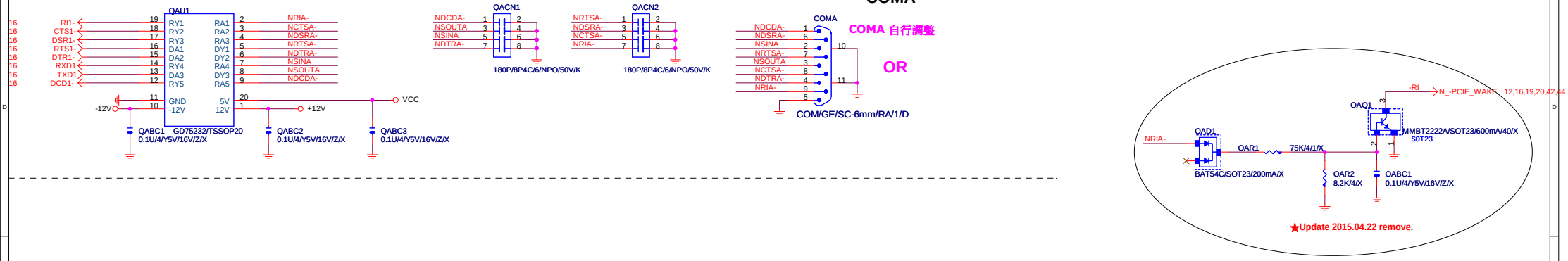

LPT PORT

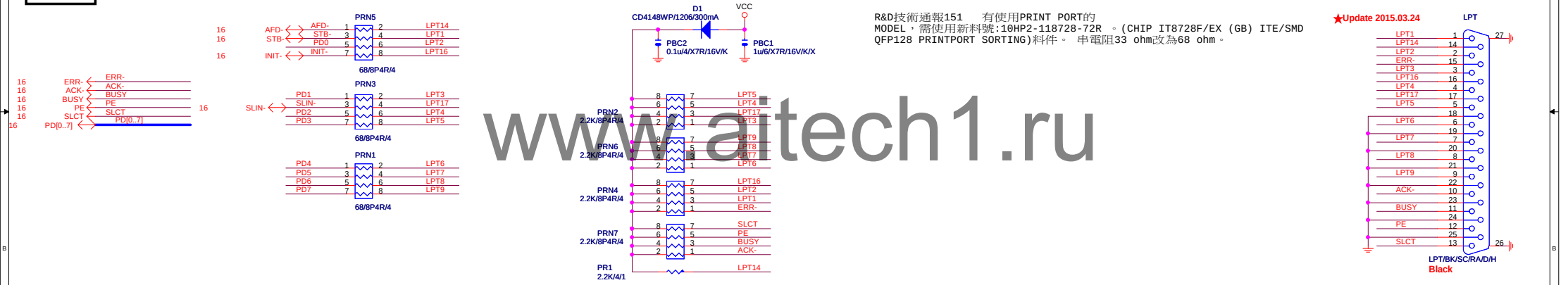

R&D技術通報151　有使用PRINT PORT的
MODEL，需使用新料號:10HP2-118728-72R 。(CHIP IT8728F/EX (GB) ITE/SMD
QFP128 PRINTPORT SORTING)料件。 串電阻33 ohm改為68 ohm。

www.aitech1.ru

TPM CONNECTOR

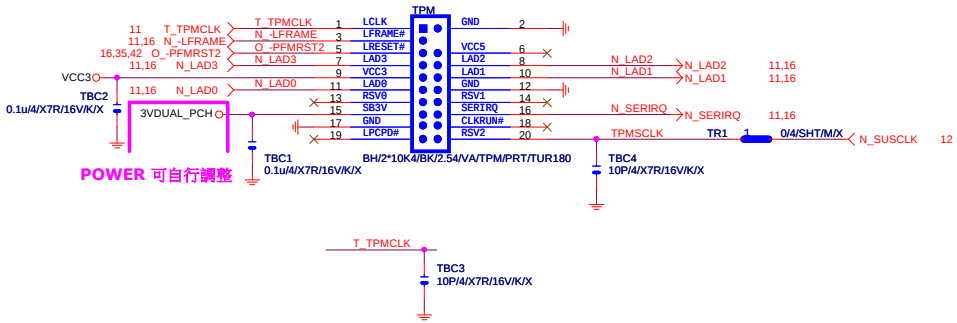

Thunderbolt

BIOS_PH

GIGABYTE		
Title	FP,F_USB,USB PWR,BZ	
Size Custom	Document Number GA-P110-D3	Rev 1.0
Date: Monday, April 11, 2016	Sheet 41 of 50	

Rev 0.1

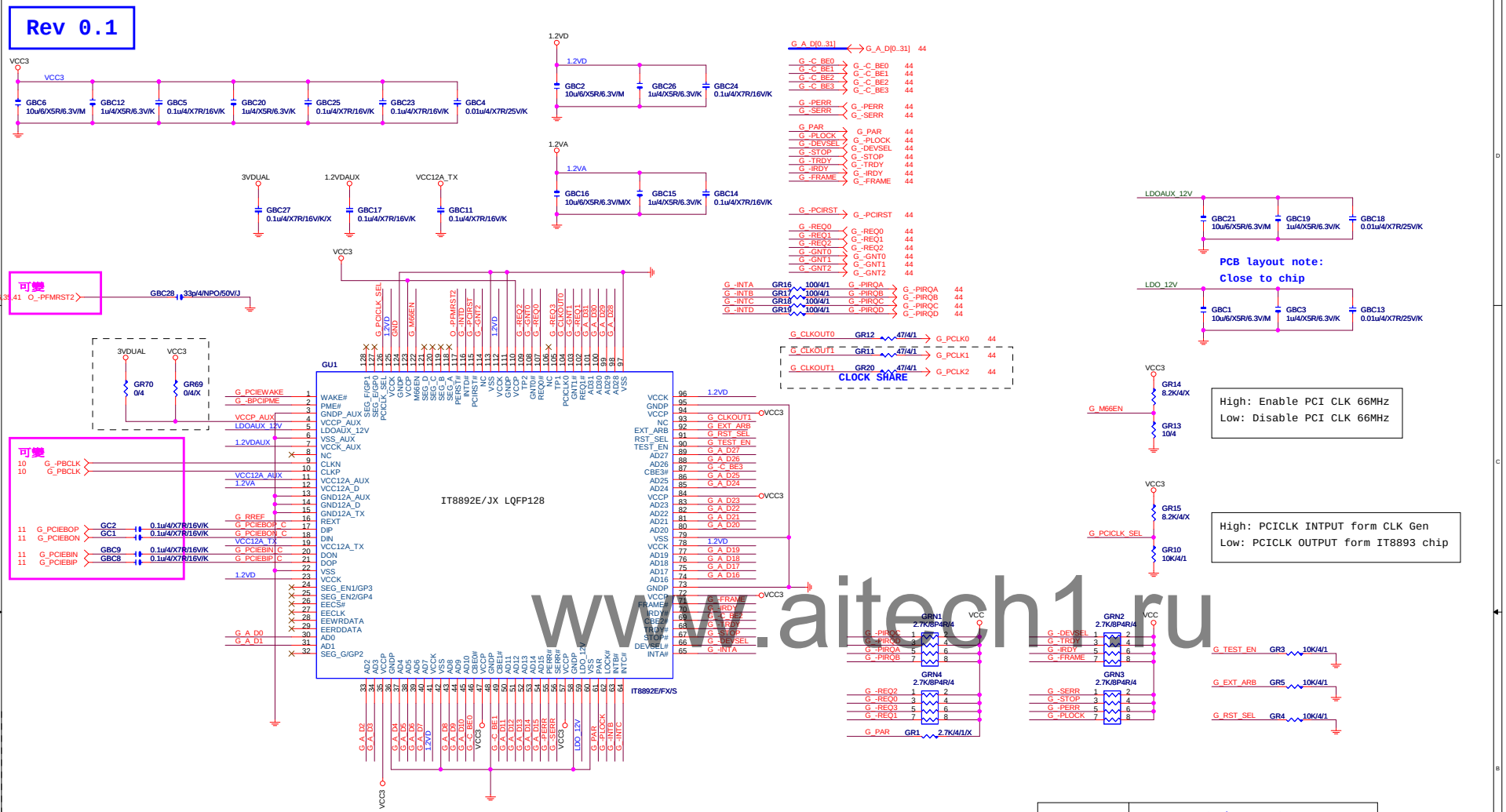

www.aitech1.ru

	Component change note
IT8892FX	GR70,GR74,GR76,GR78,GR66 : ON GR69,GR73,GR75,GR77,GR67 : NC GR44 resistor is 12k ohm GL14,GL10,GL16,GL17 : ON GL19,GL21,GL23,GL25: NC
IT8892JX	GR70,GR73,GR75,GR78,GR66 : ON GR69,GR74,GR76,GR77,GR67 : NC GR44 resistor is 18k ohm GL14,GL10,GL16,GL17 : ON GL19,GL21,GL23,GL25: NC
External LDO Power (IT8892JX)	GR69,GR73,GR75,GR77,GR67 : ON GR70,GR78,GR66 : NC GR44 resistor is 18k ohm GL19,GL21,GL23,GL25 : ON GL14,GL10,GL16,GL17 : ON

Gigabyte Technology

Title: IT8892E

Size: Custom | Document Number: GA-P110-D3 | Rev: 1.0

Date: Monday, April 11, 2016 | Sheet 42 of 50

Rev 0.1

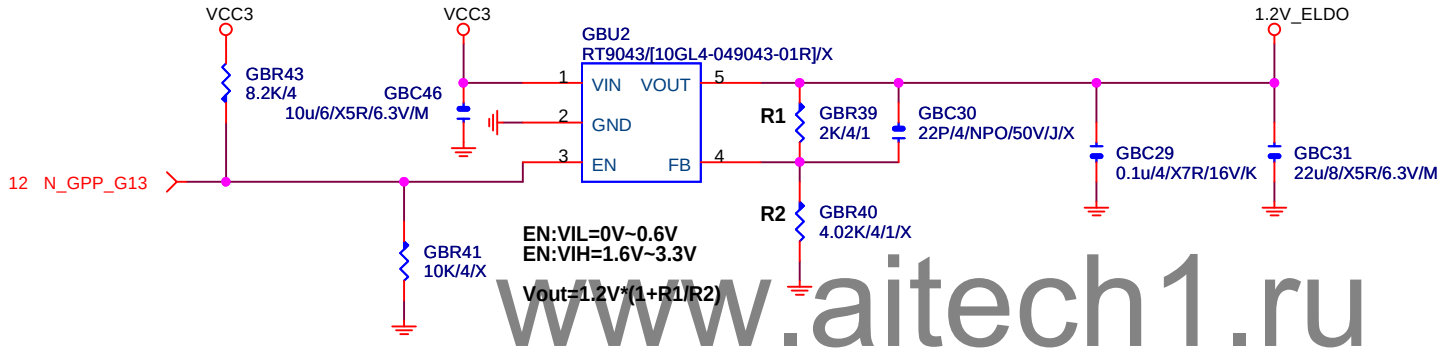

www.aitech1.ru

Gigabyte Technology			
Title	ASM1085 POWER		
Size Custom	Document Number GA-P110-D3		Rev 1.0
Date: Monday, April 11, 2016	Sheet 43 of 50		

Rev 0.3

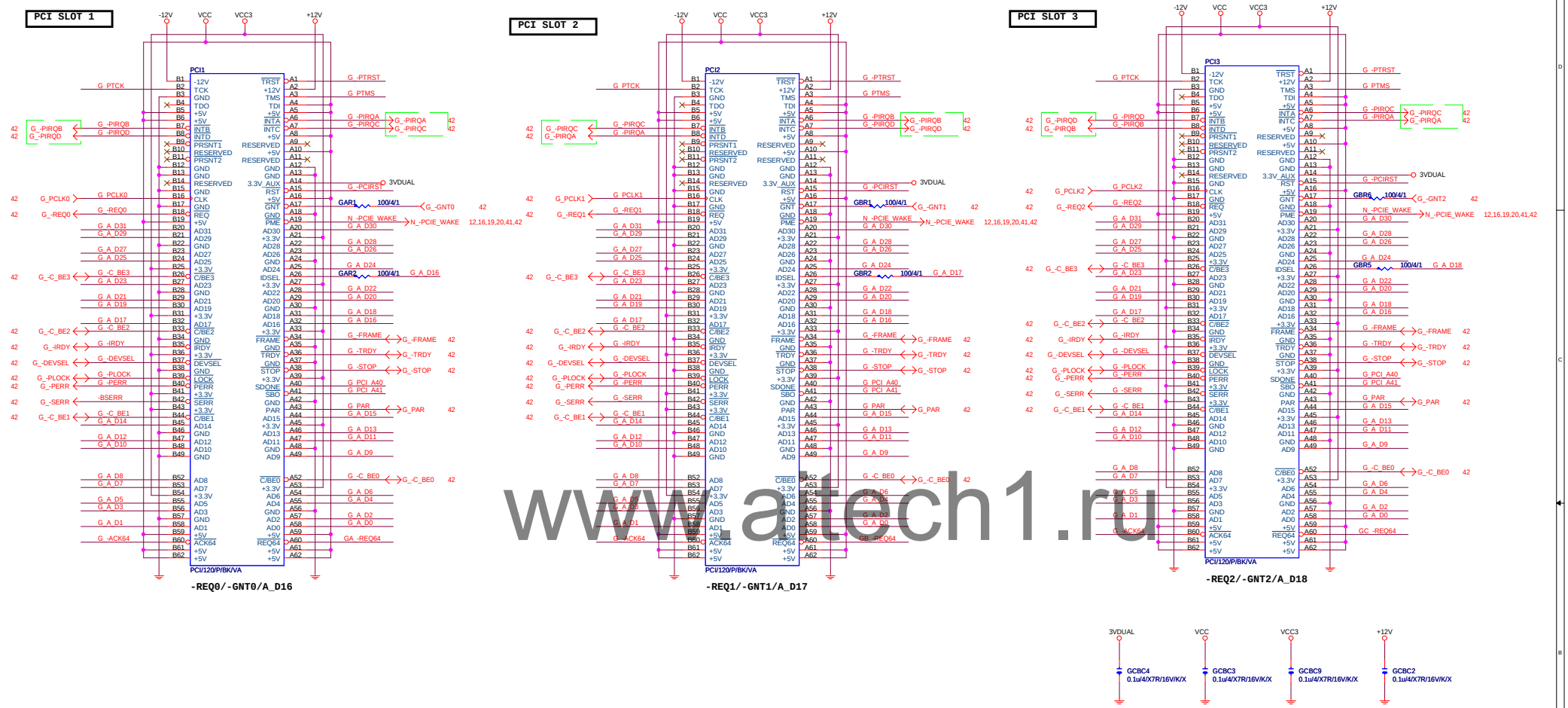

www.atech1.ru

GIGABYTE™

Title	PCI SLOT 1&2&3
Size C	Document Number GA-P110-D3
Rev	1.0
Date: Monday, April 11, 2016	Sheet 44 of 50

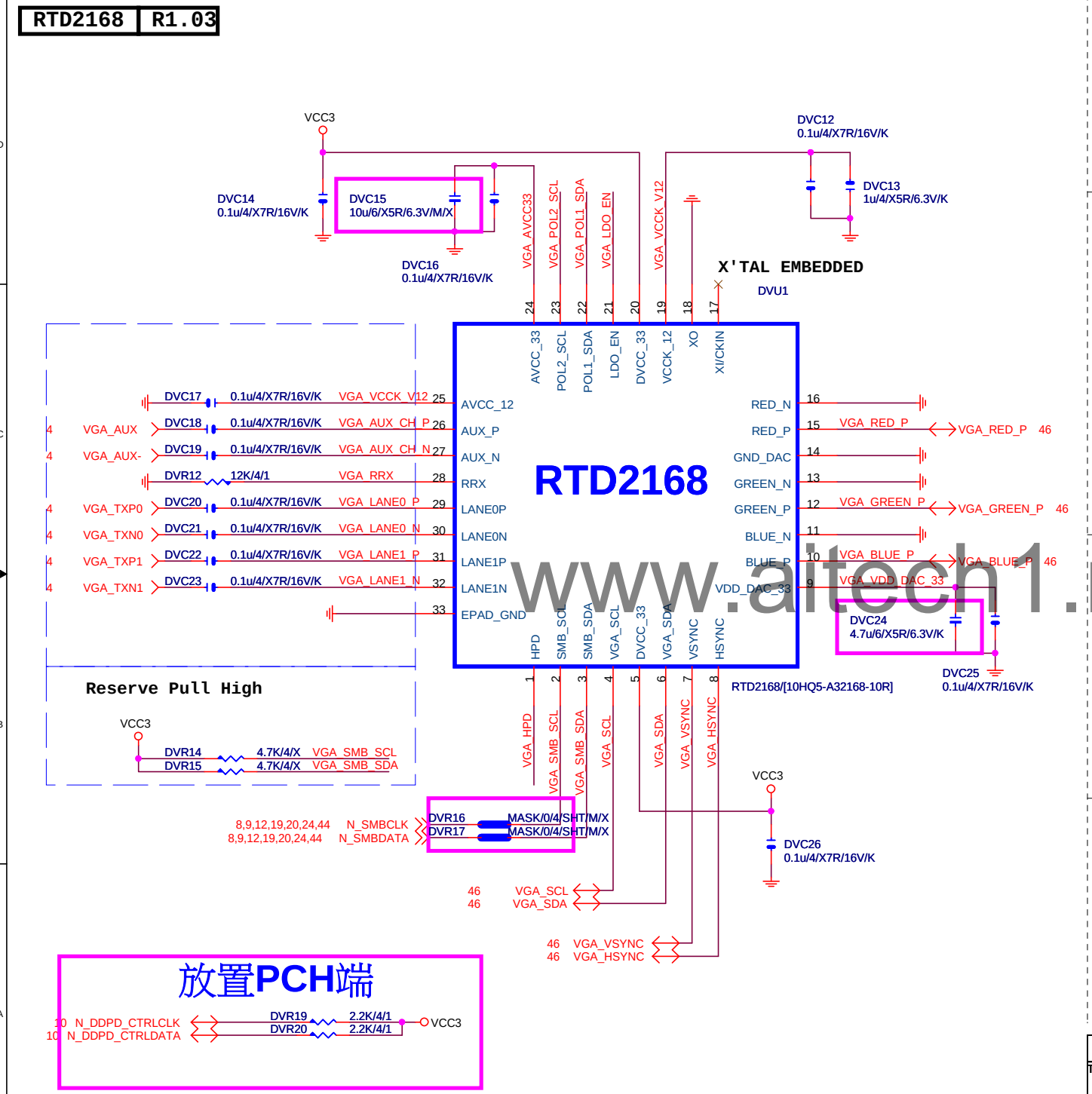

www.aitech1.ru

POWER

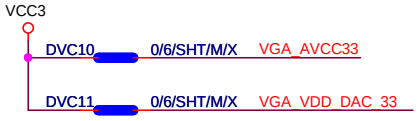

Power on latch

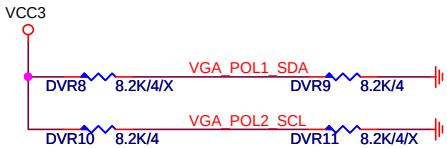

		POL1_SDA(PIN22)	
		0	1
POL2_SCL (PIN23)	0	X	EP MODE
	1	ROM ONLY MODE	EEPROM MODE

Embedded LDO

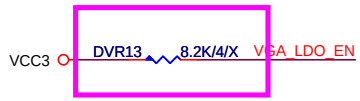

LDO_EN(PIN21)	
0	1
VCCK_V12 from External 1.2V	VCCK_V12 from Embedded LDO

DP HPD

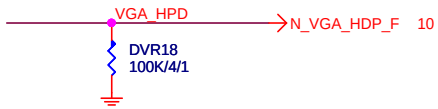

Gigabyte Technology			
Title	DP-VGA RTD2168		
Size Custom	Document Number GA-P110-D3		Rev 1.0
Date: Monday, April 11, 2016	Sheet 45 of 50		

VGA SIGNAL R1.03

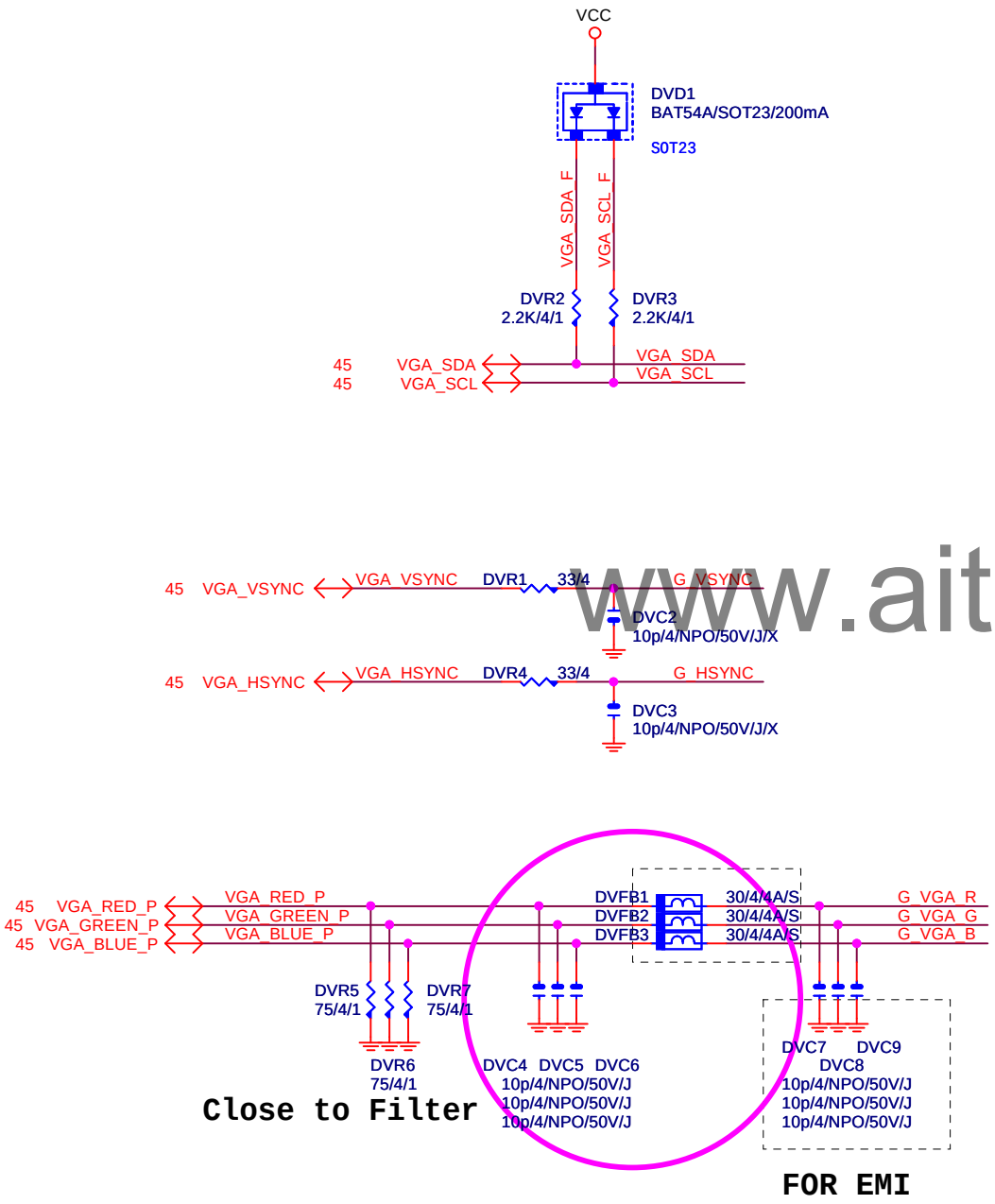

VGA CONN.

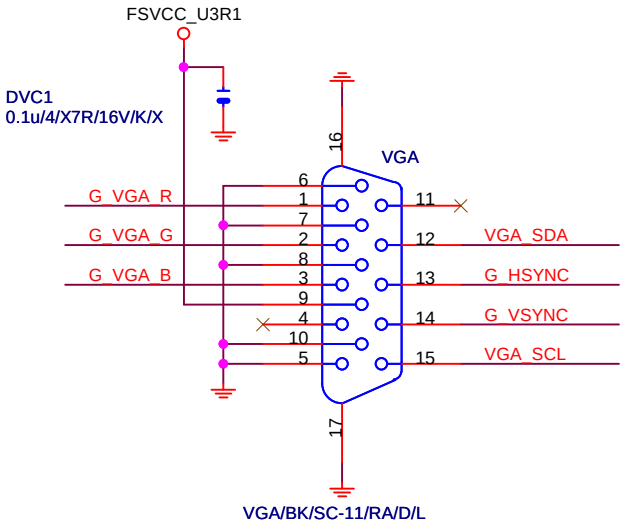

VGA ESD

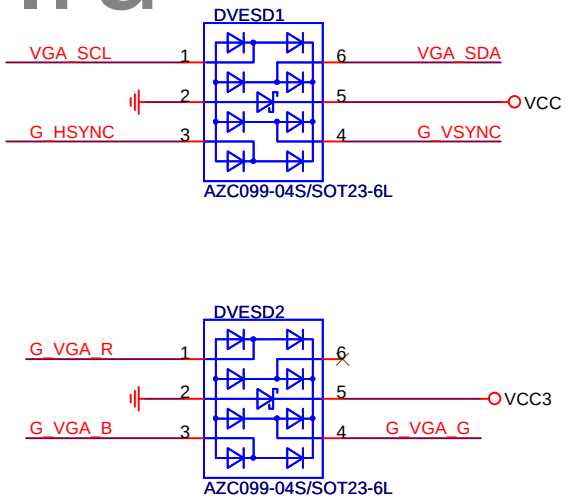

www.aitech1.ru

Title	Gigabyte Technology DP-VGA RTD2168	
Size Custom	Document Number GA-P110-D3	Rev 1.0
Date: Monday, April 11, 2016	Sheet 46 of 50	

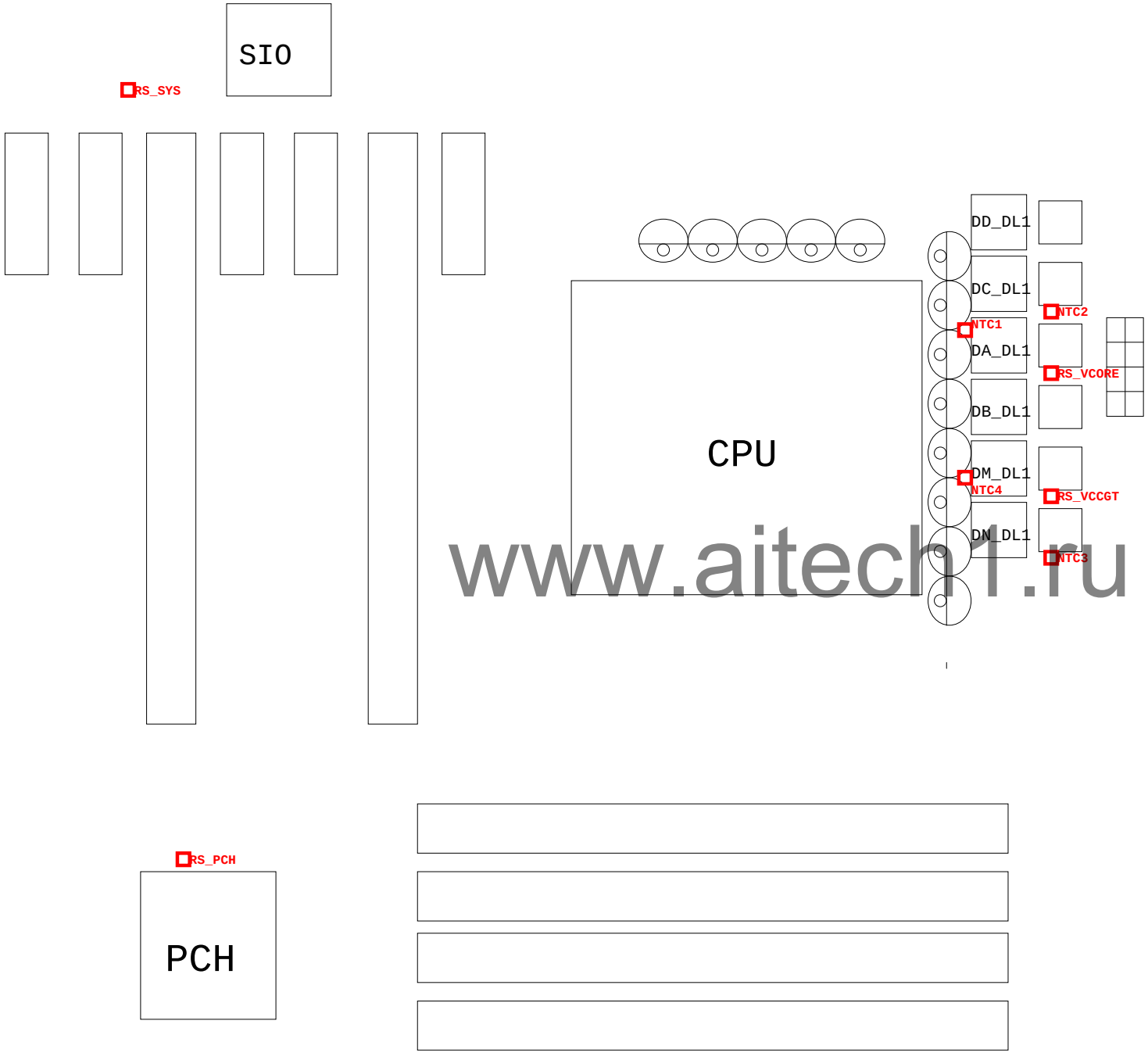

www.aitech1.ru

Gigabyte Technology		
Title: Thermesister Location		
Size: Custom	Document Number: GA-P110-D3	Rev: 1.0
Date: Monday, April 11, 2016	Sheet 47 of 50	

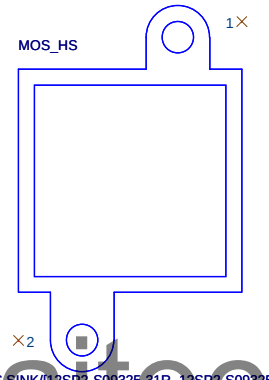

www.altech1.ru

GIGABYTE™

Title	Heatsink	
Size: Custom	Document Number: GA-P110-D3	Rev: 1.0
Date: Monday, April 11, 2016	Sheet 48 of 50	

EMI/ESD R0.1

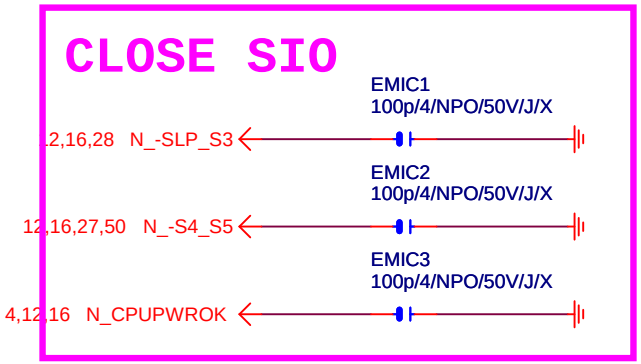

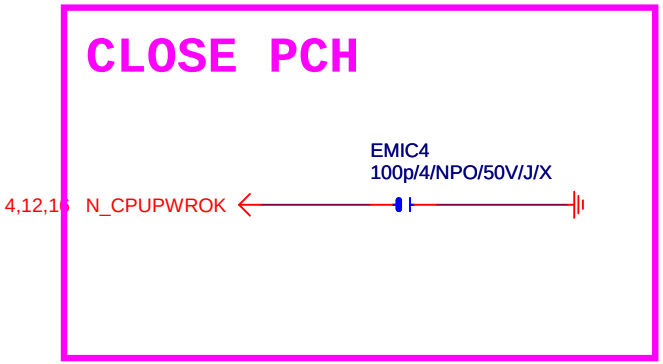

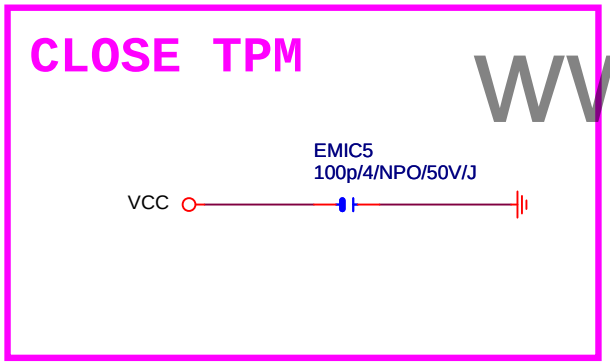

www.aitech1.ru

GIGABYTE™

Title	EMI/ESD	
Size A	Document Number GA-P110-D3	Rev 1.0
Date: Monday, April 11, 2016	Sheet 49 of 50	

REV:0.4

VPP_25V

CHOKE與CAP料號可變

L=1u
DCR=3.2 mohm
Isat=18A
Idc=15A

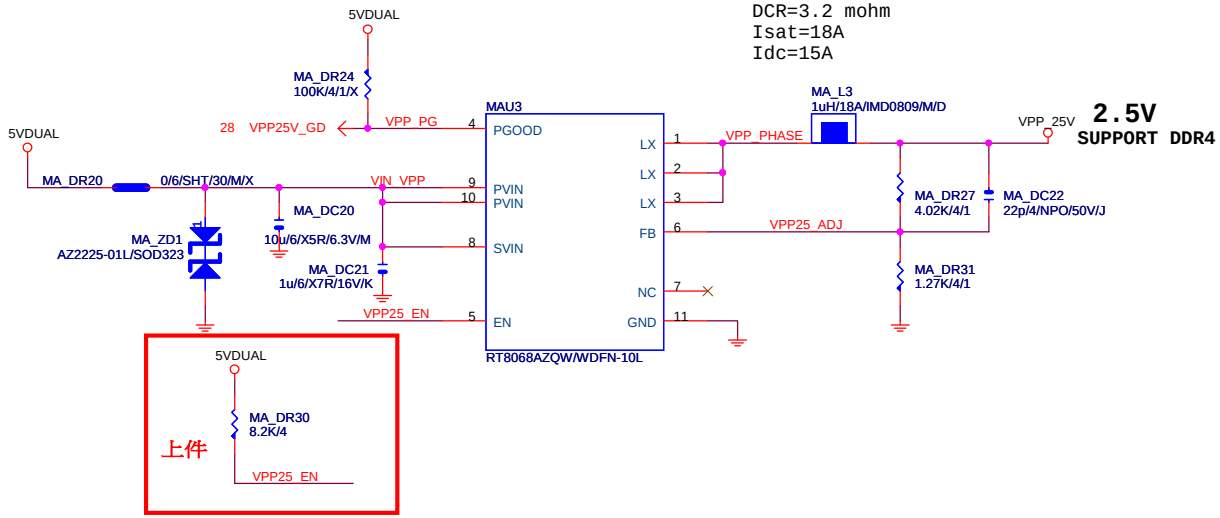

www.aitech1.ru

PWR SEQ

* 刪 MA_DR32

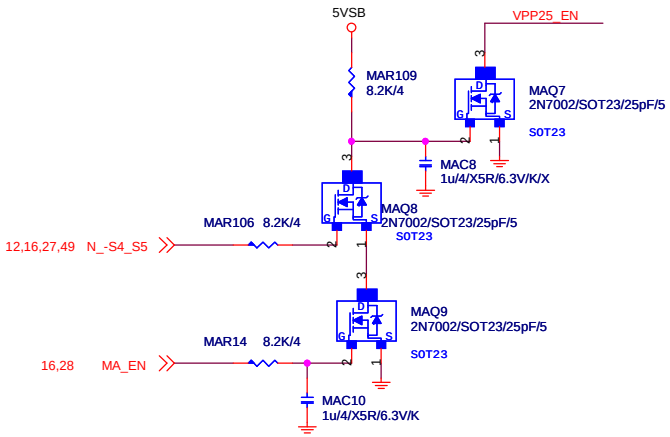

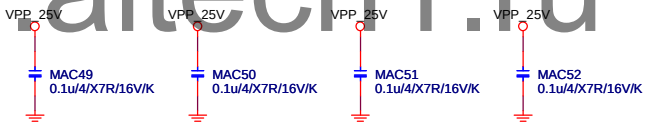

VPP CAP 22u*1PCS

* 大電容 x0

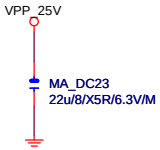

GIGABYTE™

Title	RT8068A_VPP25 POWER		
Size Custom	Document Number GA-P110-D3		Rev 1.0
Date: Monday, April 11, 2016	Sheet 50 of 50		